ST. ANNE'S COLLEGE OF ENGINEERING AND TECHNOLOGY
(Approved by AICTE, New Delhi. Affiliated to Anna University, Chennai)
ANGUCHETTYPALAYAM, PANRUTI – 607 106.

DEPARTMENT OF ELECTRONICS AND COMMUNICATION ENGINEERING

NOTES

III SEMESTER

EC3351 – CONTROL SYSTEM

Prepared by

Mrs. J. Arul Martinal,
AP/ EEE

UNIT I – SYSTEM COMPONENTS AND THEIR REPRESENTATION

A system is arrangement of components or devices connected together to perform a specific function. A control system is a type of system, which for a specific input gives corresponding output.

Definition:

- When a number of elements or components are connected in a sequence to perform a specific function, the group thus formed is called a **system**
- When a output quantity is controlled by varying the input quantity, the system is called **control system**

Example: Automatic Tea/Coffee Maker, Electric Hand Drier, Automatic Electric Iron, Servo Voltage Stabilizer, Missile launching systems etc

BASIC STRUCTURE OF A SYSTEM

The system consists of various components such as

Input: flow of energy or material that causes process to react or respond. **Manipulated Input** is a input which is subjected to control. **Disturbance Input** is an undesirable and unavoidable input to the plant, also known as Disturbance or Noise.

Command Input: The external input which is independent of the feedback control. **Reference Input Element:** This element estimates the relationship between the command and reference input.

Error Detector: Also known as comparator, it compares the reference input with feedback signal.

Controller: This element is responsible for suitable control action. **Control Signal** is the output of the controller.

Error Signal: Output of error detector.

Final Control Element: Actuator element block.

Controlled System: Process, in which a particular condition is to be controlled. **Disturbance Input:** Variable which designer has no control or little information is available on magnitude or function or time.

Controlled Variable: It is influenced by both manipulated variable and disturbance. **Feedback :** It is a function of controlled variable. It is Used to correct the nonlinear in the controlled system.

CLASSIFICATION OF CONTROL SYSTEM

1. Open loop and closed loop system
2. Linear and nonlinear system
3. Time Invariant and Time Variant system
4. Continuous and Discrete system
5. SISO and MIMO system.
6. Lumped parameter and Distributed parameter system
7. Deterministic and Stochastic control system
8. Static and Dynamic system

Open loop and closed loop system

Open Loop Control System: A control system in which the control action is totally independent of output of the system. Any physical system which does not automatically correct the variation in its output or control system in which the output quantity has no effect upon the input quantity are called open-loop control system. This means that the output is not feedback to the input for correction.

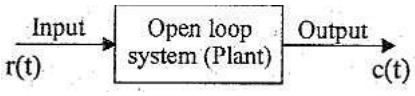

Fig: Open loop system.

In open loop system the output can be varied by varying the input. But due to external disturbances the system output may change. When the output changes due to disturbances, it is not followed by changes in input to correct the output. In open loop systems the changes in output are corrected by changing the input manually.

Example:

1. Light Switch : Lamp glows whenever light switch is „ON" irrespective of light is required or not.
2. Volume of Stereo System: Volume is adjusted manually irrespective of output volume level.
3. Man walking on road with closed eyes. It is very difficult to walk on the desired path.
4. Electric hand drier
5. Automatic washing machine
6. Bread toaster

Merits:

1. System are simple in construction and design.
2. Easy to maintain
3. Economical
4. Stable

1. Systems are inaccurate and not reliable
2. Recalibration of the controller is necessary time to time
3. Changes in output due to external disturbance are not corrected automatically.

Closed Loop Control System: Control systems in which the output has an effect upon the input quantity in order to maintain the desired output value are called closed loop systems.

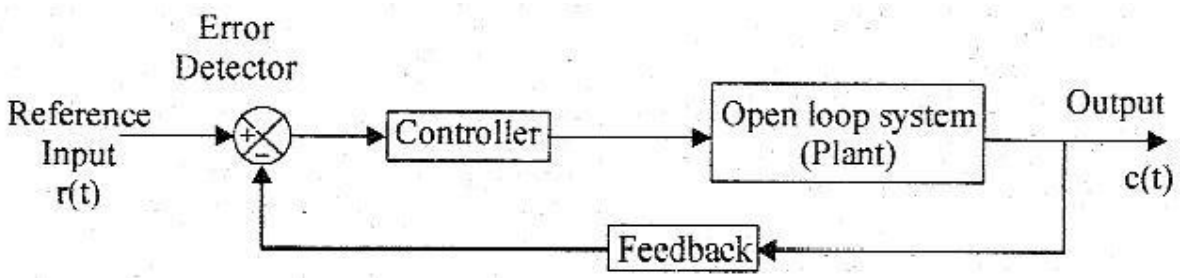

Fig: Closed loop control system.

The open loop system can be modified as closed loop system by providing a feedback. The provision of feedback automatically corrects the changes in output due to disturbances. Hence the closed loop system is also called automatic control system. The general block diagram of an automatic control system is shown in fig.

It consists of an error detector, a controller, plant (open loop system) and feedback path elements. The reference signal (or input signal) corresponds to desired output. The feedback path elements samples the output and converts it to a signal of same type as that of reference signal. The feedback signal is proportional to output signal and it is fed to the error detector.

The error signal generated by the error detector is the difference between reference signal and feedback signal. The controller modifies and amplifies the error signal to produce better control action. The modified error signal is fed to the plant to correct its output.

Example:

1. Automatic electric Iron: Heating element are controlled by output temperature of the iron.
2. Air Conditioner: It‟s function depends on the temperature of the room.
3. Water Level Controller: Input water is controlled by water level of the reservoir.
4. Man walking with eyes open in a road, eye performs as error detector, compares actual path of the movement with prescribed path and generates error signal. This error signal transmits the corresponding control signal to the legs to connect the actual movement to desired path.

Merits:

1. The closed loop systems are accurate and reliable
2. Reduced effect of Nonlinearity and disturbance.
3. Operating frequency zone is high.
4. Senses the environmental changes and external disturbance and accordingly takes necessary control action.

Demerits:

1. The closed loop systems are complex and costly.
2. The feedback in closed loop system may lead to oscillatory response.
3. The feedback reduces the overall gain of the system.

SNO	**Open Loop Control System**	**Closed Loop Control System**
1.	Feedback is absent	Feedback is always present
2.	An error detector is not present	An error detector is always present
3.	Stable	It may become unstable
4.	Easy to construct	Complicated in construction
5.	It is an economical	It is costly.
6.	Has small bandwidth	Has large bandwidth
7.	It is inaccurate.	It is accurate
8.	Less maintenance	More maintenance
9.	It is unreliable	It is reliable
10.	Examples: Hand drier, tea maker	Examples: Servo voltage stabilizer, perspiration

Linear and Nonlinear system: Linear system obeys law of superposition. The principle of superposition states that the response produced by simultaneous application of two different forcing functions is the sum of individual responses.

If r(t) is input and y(t) is the output, and $r_1(t) \rightarrow y_1(t)$ for $t \geq 0$ and $r_2(t) \rightarrow y_2(t)$ for $t \geq 0$, if the input $r(t) = ar_1(t) + br_2(t)$: for $t \geq 0$,

then for a linear system the output must be $y(t) = ay_1(t) + by_2(t)$, for $t \geq 0$.

Time Invariant and Time Variant system:

For a time invariant system the parameter does not vary with time, response of such system is independent of time at which input is applied.

For time variant the response depends on time. For example, in the space vehicle control system the mass of the vehicle reduces as time increases and fuel decreases.

Continuous and Discrete system

If all the elements of the describing equation is define for all time, then the system is continuous time (Differential Equation).If as in sampled date system, some elemental equation are define or used only at discrete time points, then the system is discrete time system (Difference Equation).

SISO and MIMO system

Single input – Single output and Multi input and multi output system.

Lumped parameter and Distributed parameter system

In Lumped Parameter system the significant variable of the system are lumped at some discrete point, hence they are described by ordinary differential equation. When the significant variables are distributed with respect to space and time, they are described by partial fraction with time, with variables as independent variables.

Deterministic and Stochastic control system

In deterministic system the response is predictable, whereas in Stochastic system the variables and parameters are random and the response is not predicable.

Static and Dynamic system

In a dynamic system the present output depends on present and past inputs. In a static system the present output depends on only the present input.

MATHEMATICAL MODELS

Mathematical modelling of any control system is the first and foremost task that a control engineer has to accomplish for design and analysis of any control engineering problem. It is nothing but the process or technique to express the system by a set of mathematical equations (algebraic or differential in nature).

Analysis means the process of finding the response or output of a system when it is excited by an input or excitation provided we know the mathematical model of the system. On the other hand, **design or synthesis** means we have to find out the system equations or the arrangement of the components, provided we know the output of the system for an input.

Commonly used mathematical models are-

1. Differential equation model.
2. State space model.
3. Transfer function model.

Transfer Function. The transfer function of a linear, time-invariant, differential equation system is defined as the ratio of the Laplace transform of the output (response function) to the Laplace transform of the input (driving function) under the assumption that all initial conditions are zero.

$$G(s) = \left.\frac{\mathscr{L}[\text{output}]}{\mathscr{L}[\text{input}]}\right|_{\text{zero initial conditions}}$$

The applicability of the concept of the transfer function is limited to linear, time-invariant, differential equation systems. The transfer function approach, however, is extensively used in the analysis and designs of such systems are as follows.

1. The transfer function of a system is a mathematical model in that it is an operational method of expressing the differential equation that relates the output variable to the input variable.
2. The transfer function is a property of a system itself, independent of the magnitude and nature of the input or driving function.
3. The transfer function includes the units necessary to relate the input to the output; however, it does not provide any information concerning the physical structure of the system. (The transfer functions of many physically different systems can be identical.)
4. If the transfer function of a system is known, the output or response can be studied for various forms of inputs with a view toward understanding the nature of the system.
5. If the transfer function of a system is unknown, it may be established experimentally by introducing known inputs and studying the output of the system. Once established, a transfer function gives a full description of the dynamic characteristics of the system, as distinct from its physical description.

ELECTRICAL AND MECHANICAL
SYSTEMS Electrical Systems:

Most of the electrical systems can be modelled by three basic elements : Resistor, inductor, and capacitor. Circuits consisting of these three elements are analysed by using Kirchhoff's Voltage law and Current law.

Resistor*:* The circuit model of resistor is shown in Fig.

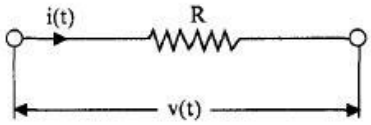

The mathematical model is given by the Ohm's law relationship,

$$V(t) = i(t)\,R$$
$$i(t) = V(t)/R$$

Inductor: The circuit representation is shown in Fig.

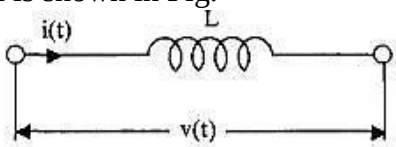

The input output relations are given by Faraday's law,

$$V(t) = L\, di(t)/dt$$

$$i(t) = (1/L)\int v\, dt$$

where Integral of v dt is known as the flux linkages. Thus

$$I(t) = \psi(t)/ L$$

Capacitor: The circuit symbol of a capacitor is given in Fig.

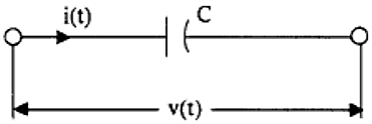

$$v(t) = (1/C)\int i\, dt$$

$$i(t) = C\, dv/dt$$

In eqn. idt is known as the charge on the capacitor and is denoted by *'q'*. Thus

$$q = \int i\, dt$$

$$v(t) = q(t)/C$$

Mechanical System

There are two types of mechanical systems based on the type of motion.

- Translational mechanical systems
- Rotational mechanical systems

Modeling of Translational Mechanical Systems

Translational mechanical systems move along a **straight line**. These systems mainly consist of three basic elements. Those are mass, spring and dashpot or damper.

If a force is applied to a translational mechanical system, then it is opposed by opposing forces due to mass, elasticity and friction of the system. Since the applied force and the opposing forces are in opposite directions, the algebraic sum of the forces acting on the system is zero. Let us now see the force opposed by these three elements individually.

Mass

Mass is the property of a body, which stores **kinetic energy**. If a force is applied on a body having mass **M**, then it is opposed by an opposing force due to mass. This opposing force is proportional to the acceleration of the body. Assume elasticity and frictions are negligible.

$F_m \ \alpha \ a$

$$F = Fm = Ma = M\frac{d^2X}{dt^2}$$

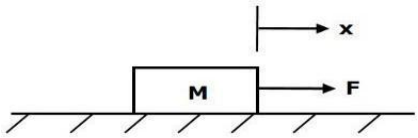

- **F** is the applied force, $\mathbf{F_m}$ is the opposing force due to mass, **M** is mass, **a** is acceleration
- **x** is displacement

Spring

Spring is an element, which stores **potential energy**. If a force is applied on spring **K**, then it is opposed by an opposing force due to elasticity of spring. This opposing force is proportional to the displacement of the spring. Assume mass and friction arenegligible.

$F_k \ \alpha \ x$

$F = F_k = KX$

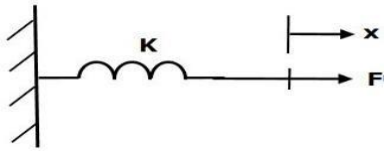

F is the applied force, $\mathbf{F_k}$ is the opposing force due to elasticity of spring, **K** is spring constant

- **x** is displacement

Dashpot

If a force is applied on dashpot **B**, then it is opposed by an opposing force due to **friction** of the dashpot. This opposing force is proportional to the velocity of the body.
Assume mass and elasticity are negligible.

$F_b \ \alpha \ w \ ; \ F = F_b = B\frac{dX}{dt};$

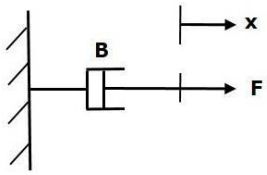

- **Zb** is the opposing force due to friction of dashpot, **B** is the frictional coefficient, **v** is velocity
- **x** is displacement

Modeling of Rotational Mechanical Systems

Rotational mechanical systems move about a fixed axis. These systems mainly consist of three basic elements. Those are **moment of inertia, torsional spring** and **dashpot**.
If a torque is applied to a rotational mechanical system, then it is opposed by opposing torques due to moment of inertia, elasticity and friction of the system. Since the applied

torque and the opposing torques are in opposite directions, the algebraic sum of torques acting on the system is zero. Let us now see the torque opposed by these three elements individually.

Moment of Inertia

In translational mechanical system, mass stores kinetic energy. Similarly, in rotational mechanical system, moment of inertia stores **kinetic energy**.
If a torque is applied on a body having moment of inertia **J**, then it is opposed by an opposing torque due to the moment of inertia. This opposing torque is proportional to angular acceleration of the body. Assume elasticity and friction are negligible.

$T_j \alpha \;\; \alpha;\; T = T_j = J\alpha = J\frac{d^2\theta}{dt^2}$

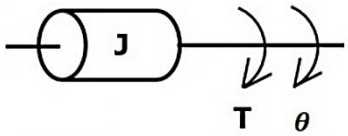

- **T** is the applied torque, $\mathbf{T_j}$ is the opposing torque due to moment of inertia, **J** is moment of inertia
- **α** is angular acceleration, **θ** is angular displacement

Torsional Spring

In translational mechanical system, spring stores potential energy. Similarly, in rotational mechanical system, torsional spring stores **potential energy**.

If a torque is applied on torsional spring **K**, then it is opposed by an opposing torque due to the elasticity of torsional spring. This opposing torque is proportional to the angular displacement of the torsional spring. Assume that the moment of inertia and friction are negligible.

$T_k \alpha \;\; \theta;\; T = T_k = K\theta$

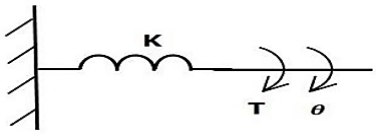

- **T** is the applied torque, $\mathbf{T_k}$ is the opposing torque due to elasticity of torsional spring, **K** is the torsional spring constant, **θ** is angular displacement

Dashpot

If a torque is applied on dashpot **B**, then it is opposed by an opposing torque due to the **rotational friction** of the dashpot. This opposing torque is proportional to the angular velocity of the body. Assume the moment of inertia and elasticity are negligible.

$T_b \alpha \;\; \theta;\; T = T_b = B\omega = B\frac{d\theta}{dt}$

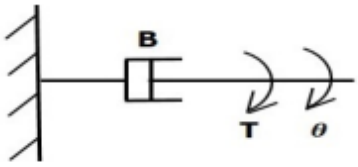

- $\mathbf{T_b}$ is the opposing torque due to the rotational friction of the dashpot, **B** is the rotational friction coefficient, **ω** is the angular velocity, **θ** is the angular displacement

Two systems are said to be **analogous** to each other if the following two conditions are satisfied.

- The two systems are physically different
- Differential equation modelling of these two systems are same

Electrical systems and mechanical systems are two physically different systems. There are two types of electrical analogies of translational mechanical systems. Those are force voltage analogy and force current analogy.

Force Voltage Analogy

In force voltage analogy, the mathematical equations of **translational mechanical system** are compared with mesh equations of the electrical system.

Consider the following translational mechanical system as shown in the following figure.

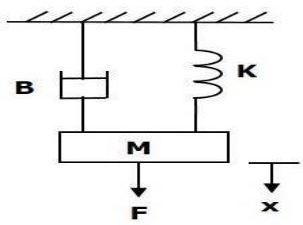

The **force balanced equation** for this system is

$F = f_m + f_b + f_k = 0$

$$F = M\frac{d^2X}{dt^2} + B\frac{dX}{dt} + Kx \quad --- (1)$$

Consider the following electrical system as shown in the following figure. This circuit consists of a resistor, an inductor and a capacitor. All these electrical elements are connected in a series. The input voltage applied to this circuit is VV volts and the current flowing through the circuit is ii Amps.

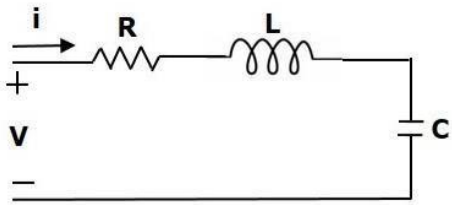

Mesh equation for this circuit is

V=Ri+Ldi/dt+1/c∫idt ------**(2)**

Substitute, i=dq/dt in Equation 2.

$$V = R\frac{dq}{dt} + L\frac{d^2q}{dt^2} + + \frac{q}{c}$$

$$V = L\frac{d^2q}{dt^2} + R\frac{dq}{dt} + + \frac{1}{c}q \quad --- (3)$$

By comparing Equation 1 and Equation 3, we will get the analogous quantities of the translational mechanical system and electrical system. The following table shows these analogous quantities.

Translational Mechanical System	Electrical System
Force(F)	Voltage(V)
Mass(M)	Inductance(L)
Frictional Coefficient(B)	Resistance(R)
Spring Constant(K)	Reciprocal of Capacitance (1c)(1c)
Displacement(x)	Charge(q)
Velocity(v)	Current(i)

Similarly, there is torque voltage analogy for rotational mechanical systems. Let us now discuss about this analogy.

Torque Voltage Analogy

In this analogy, the mathematical equations of **rotational mechanical system** are compared with mesh equations of the electrical system.

Rotational mechanical system is shown in the following figure.

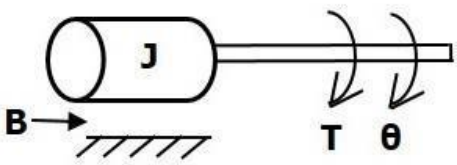

The torque balanced equation is

$$T = T_{j1} + T_b + \ T_k$$

$$T = J\frac{d^2\theta}{dt^2} + B_1\frac{d\theta}{dt} + K\theta \ --- (4)$$

By comparing Equation 4 and Equation 3, we will get the analogous quantities of rotational mechanical system and electrical system. The following table shows these analogous quantities.

Rotational Mechanical System	Electrical System
Torque(T)	Voltage(V)
Moment of Inertia(J)	Inductance(L)
Rotational friction coefficient(B)	Resistance(R)
Torsional spring constant(K)	Reciprocal of Capacitance (1c)(1c)
Angular Displacement(θ)	Charge(q)
Angular Velocity(ω)	Current(i)

Force Current Analogy

In force current analogy, the mathematical equations of the **translational mechanical system** are compared with the nodal equations of the electrical system.

Consider the following electrical system as shown in the following figure. This circuit consists of current source, resistor, inductor and capacitor. All these electrical elements are connected in parallel.

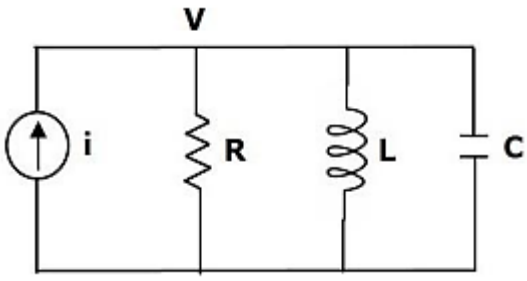

The nodal equation is

$$\frac{V}{R} + \frac{1}{L}\int V\,dt + C\frac{dV}{dt} = i(t) \ --- (5)$$

Substitute, V=dΨ/dt in Equation 5.

$$i(t) = \frac{1}{R}\frac{d\psi}{dt} + \frac{1}{L}\psi + C\frac{d^2\psi}{dt^2}$$

$$i(t) = C\frac{d^2\psi}{dt^2} + \frac{1}{R}\frac{d\psi}{dt} + \frac{1}{L}\psi \ --- 6$$

(By comparing Equation 1 and Equation 6, we will get the analogous quantities of the translational mechanical system and electrical system. The following table shows these analogous quantities.

Translational Mechanical System	Electrical System
Force(F)	Current(i)
Mass(M)	Capacitance(C)
Frictional coefficient(B)	Reciprocal of Resistance(1R)(1R)
Spring constant(K)	Reciprocal of Inductance(1L)(1L)
Displacement(x)	Magnetic Flux(ψ)
Velocity(v)	Voltage(V)

Similarly, there is a torque current analogy for rotational mechanical systems. Let us now discuss this analogy.

Torque Current Analogy

In this analogy, the mathematical equations of the **rotational mechanical system** are compared with the nodal mesh equations of the electrical system.

By comparing Equation 4 and Equation 6, we will get the analogous quantities of rotational mechanical system and electrical system. The following table shows these analogous quantities.

Rotational Mechanical System	Electrical System
Torque(T)	Current(i)
Moment of inertia(J)	Capacitance(C)
Rotational friction coefficient(B)	Reciprocal of Resistance(1R)(1R)
Torsional spring constant(K)	Reciprocal of Inductance(1L)(1L)
Angular displacement(θ)	Magnetic flux(ψ)
Angular velocity(ω)	Voltage(V)

These analogies are helpful to study and analyze the non-electrical system like mechanical system from analogous electrical system.

Examples

1. Write the differential equations governing the mechanical system shown in fig .And determine the transfer function?

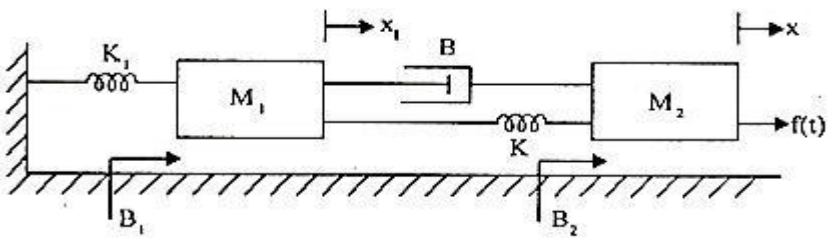

<u>Solution</u>

In the given system, applied force f(t) is the input and displacement X is the output

Let, Laplace transfer of f(t)=£$\{f(t) = F(s)\}$

Laplace transfer of x =)=£$\{X\} = X(s)$

Laplace transfer of X_1= £$\{X_1\} = X_1(s)$

Hence the required transfer function is $\frac{X(s)}{F(s)}$

At Node 1 (M1)

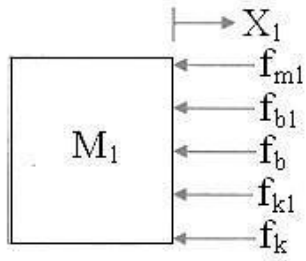

$$f_{m1} = M_1 \frac{d^2X_1}{dt^2};\ f_{b1} = B_1 \frac{dX_1}{dt}; f_{k1} = K_1X_1;$$

$$f_b = B\frac{d}{dt}(X_1 - X); f_k = K(X_1 - X);$$

By Newton's second law, $f_{m1} + f_{b1} + f_b + f_{k1} + f_k = 0$

$$\therefore M_1 \frac{d^2X_1}{dt^2} + B_1 \frac{dX_1}{dt} + B\frac{d}{dt}(X_1 - X) + K_1X_1 + K(X_1 - X);$$

On taking Laplace transform of above equation with zero initial conditions we get,

$$M_1s^2X_1(s) + B_1sX_1(s) + Bs[X_1(s) - X(s)] + K_1X_1(s) + K[X_1(s) - X(s)] = 0$$

$$X_1(s)[M_1s^2 + (B_1 + B)s + (K_1 + K)] - X(s)[Bs + K] = 0$$

$$X_1(s)[M_1s^2 + (B_1 + B)s + (K_1 + K)] = X(s)[Bs + K]$$

$$\therefore X_1(s) = X(s)\frac{Bs + K}{M_1s^2 + (B_1 + B)s + (K_1 + K)} \ldots\ldots\ldots\ldots\ldots\ldots\ldots\ldots\ldots (1)$$

At Node 2 (M2)

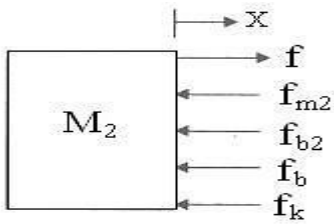

$$f_{m2} = M_2 \frac{d^2X}{dt^2}; f_{b2} = B_2 \frac{dX}{dt}; f_b = B\frac{d}{dt}(X - X_1); f_k = K(X - X_1)$$

By Newton's second law, $f_{m2} + f_{b2} + f_b + f_k = f(t)$

$$M_2 \frac{d^2X}{dt^2} + B_2 \frac{dX}{dt} + B\frac{d}{dt}(X - X_1) + K(X - X_1) = f(t)$$

On taking Laplace transform of above equation with zero initial conditions we get,

$$M_2s^2X(s) + B_2sX(s) + Bs[X(s) - X_1(s)] + K[X(s) - X_1(s)] = F(s)$$

$$X(s)[M_2s^2 + (B_2 + B)s + K] - X_1(s)[Bs + K] = F(s) \ldots\ldots\ldots\ldots\ldots (2)$$

Substituting $X_1(s)$ from equation (1) in equation (2) we get,

$$X(s)[M_2s^2 + (B_2 + B)s + K] - \frac{(Bs + K)^2}{M_1s^2 + (B_1 + B)s + (K_1 + K)} = F(s)$$

$$X(s)\left[\frac{[M_1s^2 + (B_2 + B)s + K][M_2s^2 + (B_1 + B)s + (K_1 + K)] - (Bs + K)^2}{M_1s^2 + (B_1 + B)s + (K_1 + K)}\right] = F(s)$$

$$\therefore \frac{\mathbf{X(s)}}{\mathbf{F(s)}} = \frac{\mathbf{M_1s^2 + (B_1 + B)s + (K_1 + K)}}{\mathbf{[M_1s^2 + (B_1 + B)s + (K_1 + K)][M_2s^2 + (B_1 + B)s +] - (Bs + K)^2}}$$

2. Write the differential equations governing the mechanical rotational system as shown in fig, obtain the transfer function of the system.

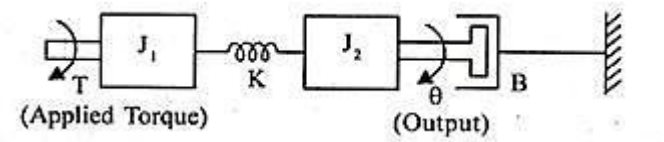

SOLUTION

In the given system, applied force f(t) is the input and displacement X is the output.

Let, Laplace transfer of T = L(T)=T(s)

Laplace transfer of ɵ =L(ɵ)=Θ(s)

Laplace transfer of $ɵ_1$=L(ɵ1)=Θ1(s)

Hence the required transfer function is= $\frac{\theta(s)}{T(s)}$

The system has two nodes and they are mass $J_1$and J_2, the differential equations governing the system are given by torques balance equations at these nodes.

Let the displacement of mass J_1 be $_1$ .The free body diagram of J_1 is shown in fig. the opposing forces acting on $J_1$are marked as T_j, and T_k.

Free body diagram-1

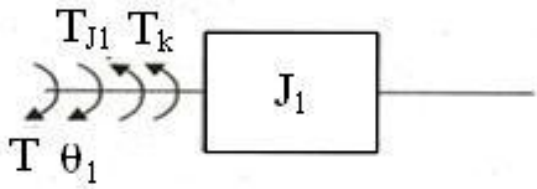

$$T_{j1} = J_1\frac{d^2\theta_1}{dt^2};\ T_k = K(\theta_1 - \theta)$$

By Newton's second law,$T_{j1} + T_k = T$

$$J_1\frac{d^2\theta_1}{dt^2} + K(\theta_1 - \theta) = T$$

On taking Laplace transform of above equation we get,

$$J_1s^2\theta_1(s) + K\theta_1(s) - K\theta(s) = T(s)$$

$$(J_1s^2 + K)\theta_1(s) - K\theta(s) = T(s) \ldots\ldots\ldots\ldots\ldots\ldots\ldots\ldots\ldots\ldots..(1)$$

Free body diagram-2

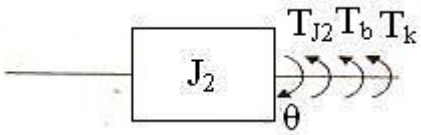

$$T_{j2} = J_2 \frac{d^2\theta}{dt^2}; T_b = B\frac{d\theta}{dt};\ T_k = K(\theta - \theta_1)$$

By Newton's second law, $T_{j2} + T_b + T_k = 0$

$$J_2 \frac{d^2\theta}{dt^2} + B\frac{d\theta}{dt} + K(\theta - \theta_1) = 0$$

On taking Laplace transform of above equation we get,

$$J_2 s^2\theta(s) + Bs\theta(s) + K\theta(s) - K\theta_1(s) = 0$$

$$(J_2 s^2 + Bs + K)\theta(s) - \theta_1(s) = 0$$

$$\theta_1(s) = \frac{(J_2 s^2 + Bs + K)}{K}\theta(s) \ldots\ldots\ldots\ldots\ldots\ldots\ldots\ldots\ldots\ldots\ldots\ldots.(2)$$

Substitute $\theta_1(s)$from equation 2 in equation 1 we get,

$$(J_1 s^2 + K)\frac{(J_2 s^2 + Bs + K)}{K}\theta(s) - K\theta(s) = T(s)$$

$$\left[\frac{(J_1 s^2 + K) + (J_2 s^2 + Bs + K) - K^2}{K}\right]\theta(s) = T(s)$$

$$\boxed{\frac{\boldsymbol{\theta(s)}}{\mathbf{T(s)}} = \frac{\mathbf{K}}{(\mathbf{J_1 s^2 + K}) + (\mathbf{J_2 s^2 + Bs + K}) - \mathbf{K^2}}}$$

3. Write the differential equations governing the mechanical system shown in fig. draw the force current electrical analogous circuit.

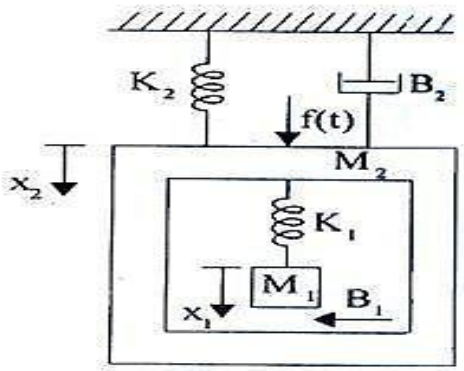

Solution:
Node-1

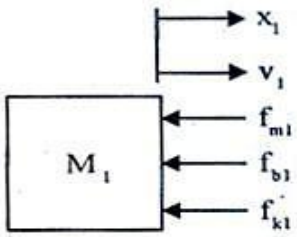

$$M_1\frac{d^2X_1}{dt^2} + B_1\frac{d(X_1 - X_2)}{dt} + K_1(X_1 - X_2) = 0$$

Node-2

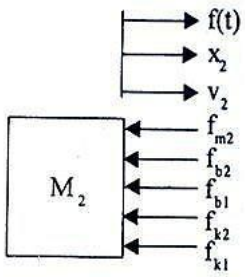

$$M_2\frac{d^2X_2}{dt^2}+B_1\frac{d(X_2-X_1)}{dt}+B_2\frac{dX_2}{dt}+K_1(X_2-X_1)+K_2X_2\ =f(t)$$

<u>Force- Current analogous circuits</u>

The electrical analogous is given by:

$f(t) = i(t)$	$M_1 \rightarrow C_1$	$B_1 \rightarrow 1/R_1$	$K_1 \rightarrow 1/L_1$
$v_1 \rightarrow v_1$	$M_2 \rightarrow C_2$	$B_2 \rightarrow 1/R_2$	$K_2 \rightarrow 1/L_2$
$v_2 \rightarrow v_2$	$B_{12} \rightarrow 1/R_{12}$		

Thus the systems equations are:

$$C_1\frac{dv_1}{dt}+\frac{1}{R_1}(v_1-v_2)+\frac{1}{L_1}\int(v_1-v_2)\,dt=0\quad\ldots\ldots(1)$$

$$C_2\frac{dv_2}{dt}+\frac{1}{R_2}v_2+\frac{1}{L_2}\int(v_2)\,dt+\frac{1}{R_1}(v_2-v_1)+\frac{1}{L_1}\int(v_2-v_1)\,dt=i(t)\quad\ldots\ldots\quad(2)$$

And the circuit is given by

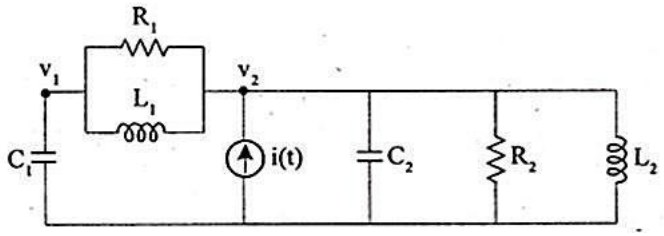

4.Determine the transfer function $Y_2(s)/F(s)$ of the shown fig.

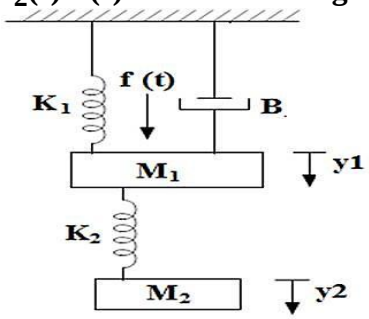

<u>Solution:</u>

Let Laplace transform of f(t) $= L\{f(t)\} = F(s)$

Let Laplace transform of y_1 $= L\{y_1\} = Y_1(s)$

Let Laplace transform of y_2 $= L\{y_2\} = Y_2(s)$

The system has two nodes and they are mass M_1 and M_2.

The differential equations governing the system are the force balance equations of at these nodes.

Consider Mass M1,

Free Body diagram of M1 ,

$$f(t) = M_1 \frac{d^2Y_1}{dt^2} + B\frac{dY_1}{dt} + K_2(Y_1 - Y_2) + K_1Y_1 \quad \text{-----1}$$

on taking Laplace Transform of equation (1) wit
h zero initial conditions,

$M_1S^2Y_1(s) + BsY_1(s) + K_1Y_1(s) + K_2[Y_1(s) - Y_2(s)] = F(s)$

$Y_1(s)[M_1S^2 + Bs + (K_1+K_2)] - Y_2(s)K_2 = F(s)$ ----2

Consider Mass M_2,

$$M_2\, d^2Y_2/dt^2 + K_2[Y_2 - Y_1] = 0$$

On taking Laplace Transform of equation (3) with zero initial conditions,

$M_2S^2Y_2(s) + K_2[Y_2(s) - Y_1(s)] = 0$ ----4

$Y_2(s)[M_2S^2 + K_2] - K_2Y_1(s) = 0;$

$Y_1(s) = Y_2(s)[M_2S^2 + K_2] / K_2$

Substituting equation $Y_1(s)$ from equation (5) into equation (2) we get,

$Y_2(s)[M_2S^2 + K_2] / K_2 + [M_1S^2 + Bs + (K_1+K_2)] - K_2Y_2(s) = F(s)$

$Y_2(s)([M_2S^2 + K_2] + [M_1S^2 + Bs + (K_1+K_2)] - K_2^2) / K_2 = F(s)$

$Y_2(s) / F(s) = K_2 / ([M_2S^2 + K_2] + [M_1S^2 + Bs + (K_1+K_2)] - K_2^2)$

5.Write the differential equations governing the mechanical rotational system shown in fig. Draw the torque-voltage and torque-current electrical analogous circuits and verify by writing mesh and node equations.

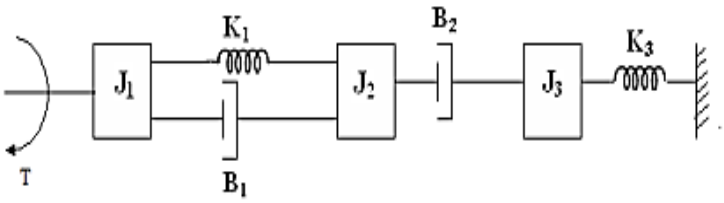

Solution:

The given mechanical rotational system has three nodes. The differential equations governing the mechanical rotational system are given by torque balance equations at these nodes.

Let the angular displacements J_1, J_2 and J_3 be θ_1, θ_2 and θ_3 respectively. The corresponding angular velocities be ω_1, ω_2 and ω_3

Consider J_1.

By Newton"s second law we get

$$T_{j1} = J_1\frac{d^2\theta_1}{dt^2};\ T_{b1} = B_1\frac{d(\theta_1 - \theta_2)}{dt};\ T_{k1} = K_1(\theta_1 - \theta_2)$$

By Newtons second law $T_{j1} + T_{b1} + T_{k1} = T$

$$J_1\frac{d^2\theta_1}{dt^2} + B_1\frac{d(\theta_1 - \theta_2)}{dt} + K_1(\theta_1 - \theta_2) = T \quad \text{.....(1)}$$

Consider J_2

$$T_{j2} = J_2\frac{d^2\theta_2}{dt^2};\ T_{b2} = B_2\frac{d(\theta_2 - \theta_3)}{dt};\ T_{k1} = K_1(\theta_2 - \theta_1);\ T_{b1} = B_1\frac{d(\theta_2 - \theta_1)}{dt}$$

By Newtons second law, $T_{j2} + T_{b2} + T_{k1} + T_{b1} = 0$

$$J_2\frac{d^2\theta_2}{dt^2} + \frac{d(\theta_2 - \theta_3)}{dt} + K_1(\theta_2 - \theta_1) + B_1\frac{d(\theta_2 - \theta_1)}{dt} = 0 \quad \text{.....(2)}$$

Consider J_3

$T_{j3} = J_3 \frac{d^2\theta_3}{dt^2}$; $T_{b2} = B_2 \frac{d(\theta_3 - \theta_2)}{dt}$; $T_{k3} = K_3\theta_3$

By Newtons Second law, $T_{j3} + T_{b2} + T_{k3} = 0$

$$J_3 \frac{d^2\theta_3}{dt^2} + B_2 \frac{d(\theta_3 - \theta_2)}{dt} + K_3\theta_3 = 0 \qquad \text{.....(3)}$$

On replacing the angular displacement by angular velocity in the differential equations we get

$$\therefore \left(\frac{d^2\theta}{dt^2} = \frac{d\omega}{dt};\ \frac{d\theta}{dt} = \omega \text{ and } \theta = \int \omega\, dt\right)$$

$$J_1 \frac{d\omega_1}{dt} + B_1(\omega_1 - \omega_2) + K_1 \int (\omega_1 - \omega_2) dt = T$$

$$J_2 \frac{d\omega_2}{dt} + B_1(\omega_2 - \omega_1) + B_2(\omega_2 - \omega_3) + K_1 \int (\omega_2 - \omega_1)\, dt = 0$$

$$J_3 \frac{d\omega_3}{dt} + B_2(\omega_3 - \omega_2) + K_3 \int \omega_3 dt = 0$$

Torque voltage analogous circuit

The electrical analogous elements for the elements of mechanical rotational systems are given below

$\omega_1 \rightarrow i_1$	$J_1 \rightarrow L_1$	$B_1 \rightarrow R_1$	$K_1 \rightarrow 1/C_1$
$\omega_1 \rightarrow i_2$	$J_2 \rightarrow L_2$	$B_2 \rightarrow R_2$	$K_3 \rightarrow 1/C_3$
$\omega_3 \rightarrow i_3$	$J_3 \rightarrow L_3$		

The Mesh basis equations using Kirchhoff‟s voltage law for the circuit is given by

$$L_1 \frac{di_1}{dt} + R_1(i_1 - i_2) + \frac{1}{C_1} \int (i_1 - i_2)\, dt = e(t)$$

$$L_2 \frac{di_2}{dt} + R_1(i_2 - i_1) + R_2(i_2 - i_3) + \frac{1}{C_1} \int (i_2 - i_1)\, dt = e(t)$$

The electrical circuit is given by

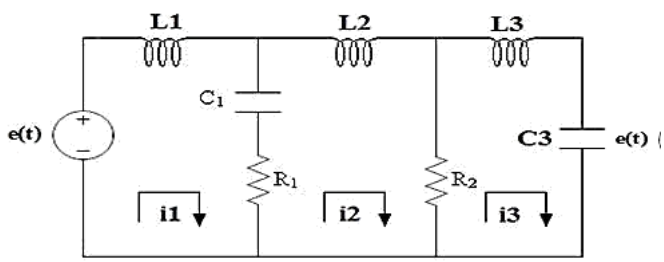

Torque current analogous circuit

The electrical analogous elements for the elements of mechanical rotational systems are

$T \rightarrow i(t)$	$\omega_1 \rightarrow v_1$	$J_1 \rightarrow C_1$	$B_1 = 1/R_1$	$K_1 \rightarrow 1/L_1$
	$\omega_2 \rightarrow v_2$	$J_2 \rightarrow C_2$	$B_2 = 1/R_2$	$K_3 \rightarrow 1/L_3$
$\omega_3 \rightarrow v_3$	$J_3 \rightarrow C_3$			

The node basis equations using Kirchhoff‟s current law for the circuit is

$$C_1 \frac{dv_1}{dt} + \frac{1}{R_1}(v_1 - v_2) + \frac{1}{L_1} \int (v_1 - v_2)\, dt = i(t) \quad \dots\dots (1)$$

$$C_2 \frac{dv_2}{dt} + \frac{1}{R_1}(v_2 - v_1) + \frac{1}{R_2}(v_2 - v_3) + \frac{1}{L_1} \int (v_2 - v_1)\, dt = 0 \quad \dots\dots \ (2)$$

$$C_3\frac{dv_3}{dt}+\frac{1}{R_2}(v_3-v_2)+\frac{1}{L_3}\int v_3\,dt=0 \quad \dots\dots(3)$$

The electrical circuit is given by

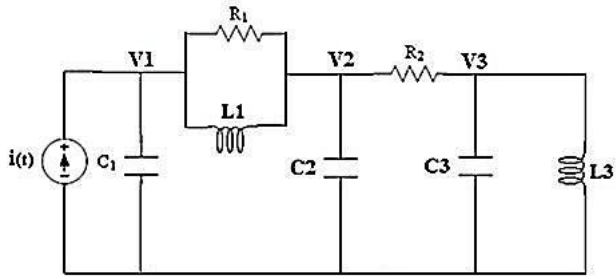

6.Write the differential equations governing the mechanical system shown in fig. Draw the force-voltage and force current electrical analogous circuits and verify by writing mesh and node equations.

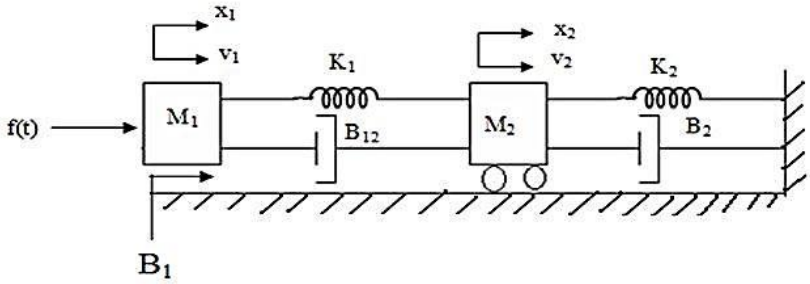

Solution:

At M1:

$$f_{m1}=M_1\frac{d^2X_1}{dt^2};\ f_{b1}=B_1\frac{dX_1}{dt};\ f_{b12}=B_{12}\frac{d}{dt}(X_1-X_2);\ f_{k1}=K_1(X_1-X_2)$$

$$M_1\frac{d^2X_1}{dt^2}+B_1\frac{dX_1}{dt}+B_{12}\frac{d}{dt}(X_1-X_2)+K_1(X_1-X_2)=0$$

At M2:

$$M_2\frac{d^2X_2}{dt^2}+B_2\frac{dX_2}{dt}+B_{12}\frac{d}{dt}(X_2-X_1)+K_2X_2+K_1(X_2-X_1)=0$$

Replacing the displacement by velocity in the differential equation we get,

$$\frac{d^2X}{dt^2}=\frac{dv}{dt}\ ;\ \frac{dX}{dt}=v\ ;\ X=\int v\,dt$$

$$M_1\frac{dv_1}{dt}+B_1v_1+B_{12}(v_1-v_2)+\int K_1(X_1-X_2)\,dt \quad =f(t)$$

$$M_2\frac{dv_2}{dt}+B_2v_2+B_{12}(v_2-v_1)+\int K_2(V_2-V_1)\,dt \quad =0$$

Force voltage analogous circuit

The electrical analogous elements for the elements of mechanical system is given by

$f(t) = e(t)$	$M_1 \rightarrow L_1$	$B_1 \rightarrow R_1$	$K_1 \rightarrow 1/C_1$
$v_1 = i_1$	$M_2 \rightarrow L_2$	$B_2 \rightarrow R_2$	$K_2 \rightarrow 1/C_2$
		$B_{12} \rightarrow R_{12}$	

The mesh basis equations using Kirchhoff‘s voltage law for the circuit shown is

$$L_1\frac{di_1}{dt}+R_1i_1+R_{12}(i_1-i_2)+\frac{1}{C_1}\int(i_1-i_2)\,dt=e(t)$$

$$L_2\frac{di_2}{dt}+R_2i_2+R_{12}(i_2-i_1)+\frac{1}{C}\int(i_2-i_1)\,dt=0$$

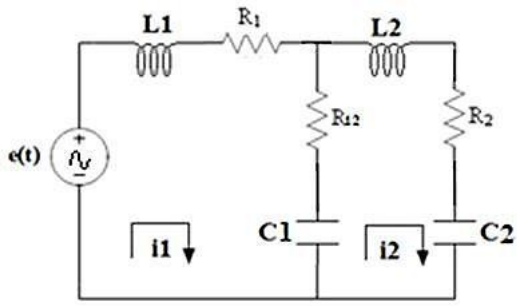

Force current analogous circuit

The electrical analogous elements for the elements of mechanical system is given by

f(t) = i(t)	$M_1 \rightarrow C_1$	$B_1 \rightarrow 1/R_1$	$K_1 \rightarrow 1/L_1$
$v_1 \rightarrow v_1$	$M_2 \rightarrow C_2$	$B_2 \rightarrow 1/R_2$	$K_2 \rightarrow 1/L_2$
$v_2 \rightarrow v_2$	$B_{12} \rightarrow 1/R_{12}$		

The node basis equations using Kirchhoff"s current law for the circuit is

$$C_1\frac{dv_1}{dt}+\frac{1}{R_1}v_1+\frac{1}{R_{12}}(v_1-v_2)+\frac{1}{L_1}\int(v_1-v_2)\,dt=i(t)\ \ldots\ldots(1)$$

$$C_2\frac{dv_2}{dt}+\frac{1}{R_2}v_2+\frac{1}{R_{12}}(v_2-v_1)+\frac{1}{L_2}\int(v_2)\,dt+\frac{1}{L_1}\int(v_2-v_1)\,dt=0\ \ldots\ldots\ (2)$$

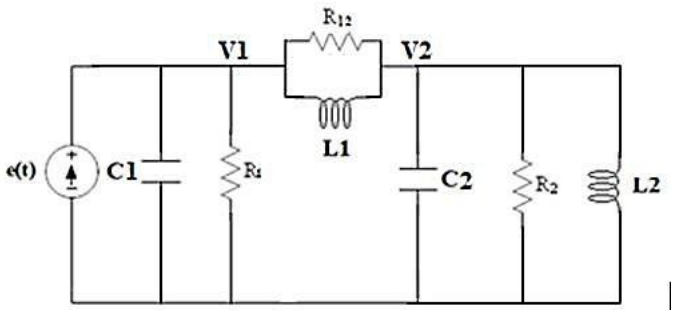

7.Derive the transfer function of the system show in the figure.

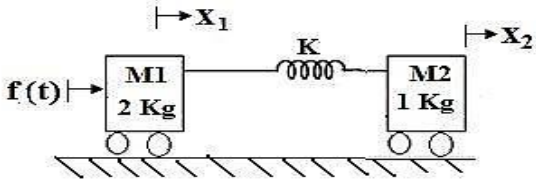

Applying Newton second law at M_1 ,

$$M_1\frac{d^2X_1}{dt^2}+K(X_1-X_2)=F(t)$$

Taking Laplace transform on both sides,

$$M_1s^2X_1(s)+K[X_1(s)-X_2(s)]=F(s)$$

$$X_1(s)[M_1s^2+K]-KX_2(s)=F(s)$$

Applying Newton second law at M_2

$$M_2\frac{d^2X_2}{dt^2}+K(X_2-X_1)=0$$

Taking Laplace transform on both sides,

$$M_2s^2X_2(s)+K[X_2(s)-X_1(s)]=0$$

$$X_2(s)[M_2s^2+K]-KX_1(s)=0$$

$$X_2(s)[M_2s^2+K]=KX_1(s)$$

$$X_1(s)=\frac{X_2(s)[M_2s^2+K]}{K}$$

substitute value of x_1 (s) in (1)

$$\frac{X_2(s)[M_2s^2+K]}{K}[M_1s^2+K]-KX_2(s)=F(s)$$

$$X_2(s)(\frac{[M_2s^2+K][M_1s^2+K]}{K}-K)=F(s)$$

$$X_2(s)(\frac{[M_2s^2+K][M_1s^2+K]-K^2}{K})=F(s)$$

$$\boldsymbol{\frac{X_2(s)}{F(s)}=\frac{K}{[M_2s^2+K][M_1s^2+K]-K^2}}$$

Substituting the value of M1 =2kg and M2=1kg we get

$$\frac{X_2(s)}{F(s)}=\frac{K}{(S^2+K)(2S^2+K)-K^2}$$

8. In the system shown in the fig below, R, L, C are electric parameters while K, M, B are mechanical parameters. Find the transfer function X(s)/E_1(s) for the system where E_1(t) is input voltage while X(t) is the output displacement.

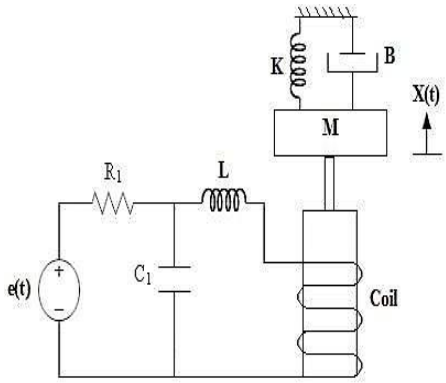

Apply Kirchhoff's voltage law at loop 1 in the above fig we get

$$Ri_1+\frac{1}{C}\int(i_1-i_2)\,dt=e(t)$$

Taking laplace Transform of the above equation

$RI_1(s)+\frac{1}{Cs}\lfloor I_1(s)-I_2(s)\rfloor=E(s)$ (or)

$(R+\frac{1}{Cs})I_1(s)-\frac{1}{Cs}\lfloor I_2(s)\rfloor=E(s)$ $---(1)$

Apply Kirchoff's Voltage law at loop 2 we get

$$L\frac{di_2}{dt}+\frac{1}{C}\int(i_2-i_1)\,dt=-e_b=-K_b\frac{dx}{dt}$$

Taking laplace Transform of the above equation

$$sLI_2(s)+\frac{1}{Cs}\lfloor I_2(s)-I_1(s)\rfloor=-sK_b\,X(s)$$

$$\frac{1}{Cs}\lfloor I_2(s)-I_1(s)\rfloor=-sK_b\,X(s)-sLI_2(s)$$

$$\frac{1}{Cs}\lfloor I_1(s)-I_2(s)\rfloor=sK_b\,X(s)+sLI_2(s)\ ---(2)$$

Substituting (2) in (1)

$$RI_1(s)+sK_b\,X(s)+sLI_2(s)=E(s)$$

From equation (2)

$$\frac{1}{Cs}I_1(s)=sK_b\,X(s)+sLI_2(s)+\frac{1}{Cs}I_2(s)$$

$$=sK_b\,X(s)+(sL+\frac{1}{Cs})I_2(s)$$

$$I_1(s)=s^2K_b\,C\,X(s)+(s^2LC+1)I_2(s)---(3)$$

Substituting (3) in (1)

$$\left(R+\frac{1}{Cs}\right)[(s^2LC+1)I_2(s)+s^2K_b\,C\,X(s)]-\frac{1}{Cs}I_2(s)=E(s)$$

Apply Newtons Second law at M

$$F_c = K_c I_2 = M\frac{d^2X}{dt^2} + B\frac{dX}{dt} + 2KX$$

Taking Laplace Transform

$$K_c I_2(s) = [Ms^2 + Bs + 2K]X(s)$$

$$I_2(s) = \frac{[Ms^2 + Bs + 2K]}{K_c}X(s)$$

Substituting this value of I (s) in eqn (3)

$$\left(s^2LC + sL + R)\ \frac{[Ms^2 + Bs + 2K]}{K_c}\right)X(s) + (s^2K_b\,RC + sK_b)X(s) = E(s)$$

After simplying the equation we get

$$\frac{\boldsymbol{X(s)}}{\boldsymbol{E(s)}} = \frac{K_c}{[(RLCs^4 + L(M + RCB)s^3 + \{RM + LB + RC(2LK + K_bK_c)\}s^2 + (RB + 2LK + K_bK_c)s + 2RK]}$$

BLOCK DIAGRAMS

Block diagram of a system is a pictorial representation of the functions performed by each component and of the flow of signals. Such a diagram depicts the interrelationships that exist among the various components. Differing from a purely abstract mathematical representation, a block diagram has the advantage of indicating more realistically the signal flows of the actual system.

In a block diagram all system variables are linked to each other through functional blocks. The *functional* block or simply *block* is a symbol for the mathematical operation on the input signal to the block that produces the output. The transfer functions of the components are usually entered in the corresponding blocks, which are connected by arrows to indicate the direction of the flow of signals. Note that the signal can pass only in the direction of the arrows. Thus a block diagram of a control system explicitly shows a unilateral property.

Figure above shows an element of the block diagram. The arrowhead pointing toward the block indicates the input, and the arrowhead leading away from the block represents the output. Such arrows are referred to as *signals.*

The dimension of the output signal from the block is the dimension of the input signal multiplied by the dimension of the transfer function in the block. The advantages of the block diagram representation of a system are that it is easy to form the overall block diagram for the entire system by merely connecting the blocks of the components according to the signal flow and that it is possible to evaluate the contribution of each component to the overall performance of the system.

In general, the functional operation of the system can be visualized more readily by examining the block diagram than by examining the physical system itself. A block diagram contains information concerning dynamic behaviour, but it does not include any information on the physical construction of the system. Consequently, many dissimilar and unrelated systems can be represented by the same block diagram.

It should be noted that in a block diagram the main source of energy is not explicitly shown and that the block diagram of a given system is not unique. A number of different block diagrams can be drawn for a system, depending on the point of view of the analysis.

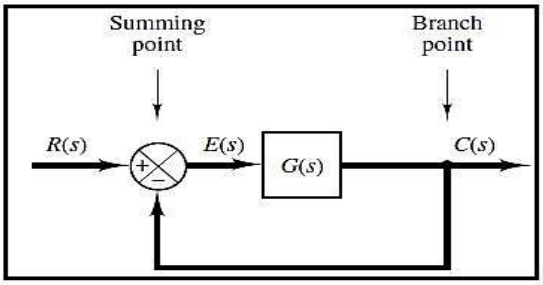

Summing Point. Referring to Figure, a circle with a cross is the symbol that indicates a summing operation. The plus or minus sign at each arrowhead indicates whether that signal is to be added or subtracted. It is important that the quantities being added or subtracted have the same dimensions and the same units.

Branch Point. A *branch point* is a point from which the signal from a block goes concurrently to other blocks or summing points.

Block Diagram of a Closed-Loop System. Figure below shows an example of a block diagram of a closed-loop system. The output C(s) is fed back to the summing point, where it is compared with the reference input R(s). The closed-loop nature of the system is clearly indicated by the figure. The output of the block, C(s) in this case, is obtained by multiplying the transfer function G(s) by the input to the block, E(s).Any linear control system may be represented by a block diagram consisting of blocks, summing points, and branch points.

When the output is fed back to the summing point for comparison with the input, it is necessary to convert the form of the output signal to that of the input signal. For example, in a temperature control system, the output signal is usually the controlled temperature. The output signal, which has the dimension of temperature, must be converted to a force or position or voltage before it can be compared with the input signal. This conversion is accomplished by the feedback element whose transfer function is H(s). The role of the feedback element is to modify the output before it is compared with the input.

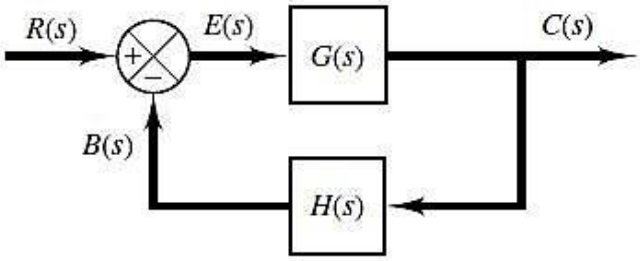

For the system shown in Figure, the output C(s) and input R(s) are related as follows:

$$C(s) = G(s)E(s)$$
$$E(s) = R(s) - B(s)$$
$$E(s) = R(s) - H(s)C(s)$$
$$C(s) = G(s)[R(s) - H(s)C(s)]$$
$$\frac{C(s)}{R(s)} = \frac{G(s)}{1 + G(s)H(s)}$$

<u>RULES FOR REDUCTION OF BLOCK DIAGRAM</u>

Rule 1: Combining blocks in series or cascade:

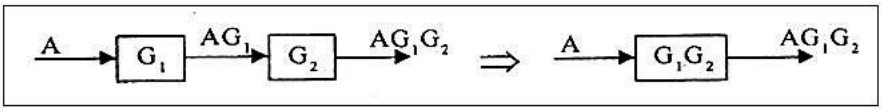

Rule 2: Combining blocks in parallel:

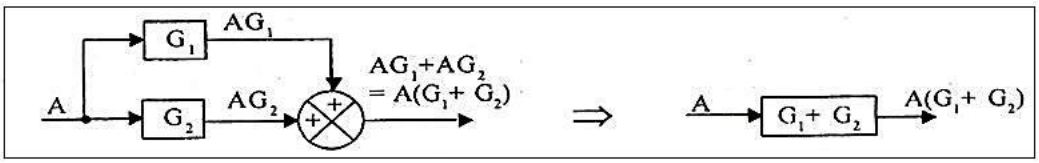

Rule 3: Moving take off (Branch Point) ahead of the block:

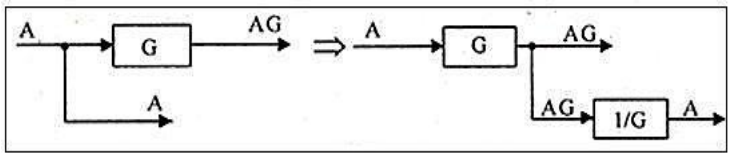

Rule 4: Moving take off (Branch Point) beyond the block:

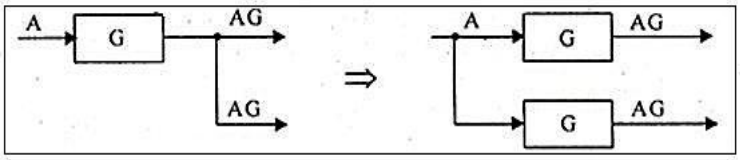

Rule 5: Moving the summing point ahead of the block:

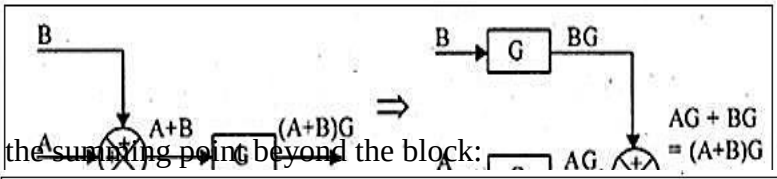

Rule 6: Moving the summing point beyond the block:

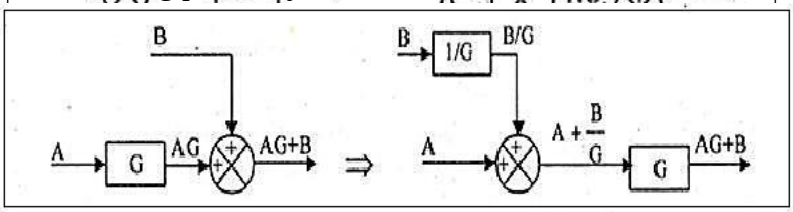

Rule 7: Interchanging Summing Points:

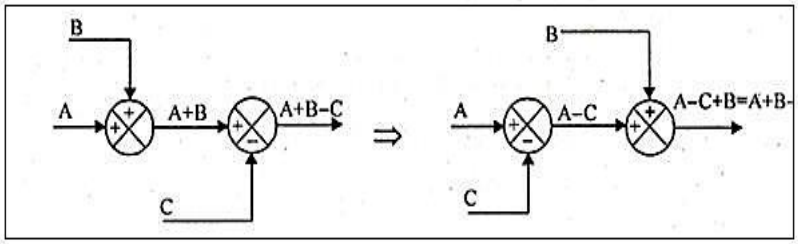

Rule 8: Splitting Summing Points:

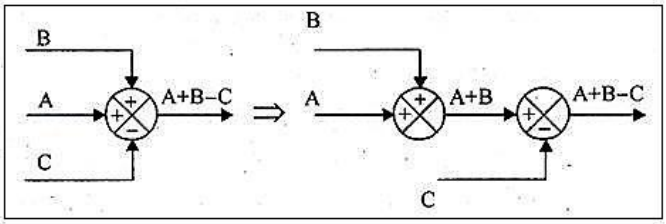

Rule 9: Combining Summing Points:

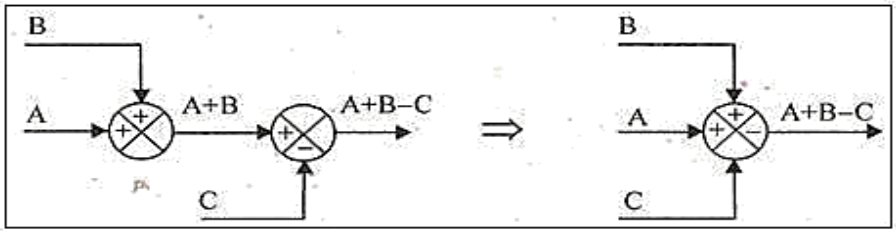

Rule 10: Eliminating negative feedback:

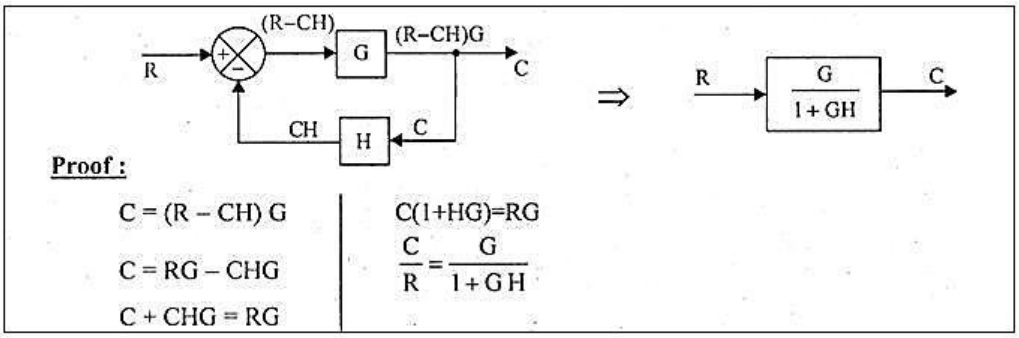

Rule 11: Eliminating positive feedback:

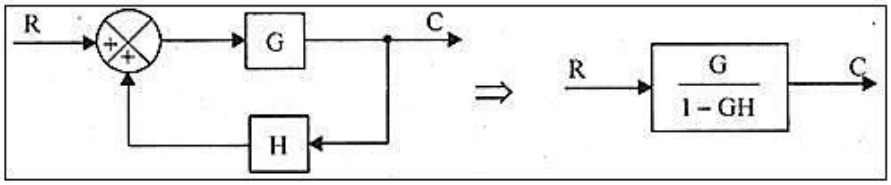

Examples:

1. Find the transfer function of the system shown in the fig. using block diagram reduction technique and signal flow graph technique.

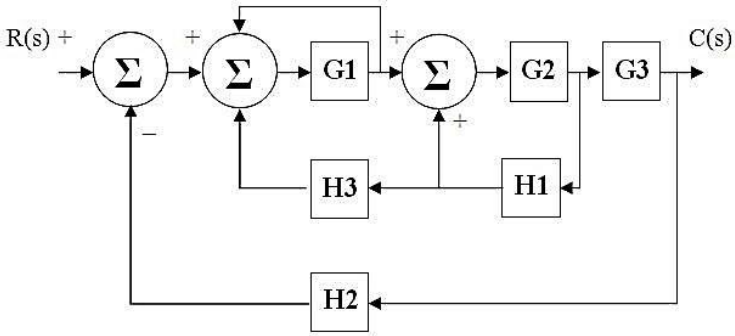

Step 1: Re arranging the branch points.

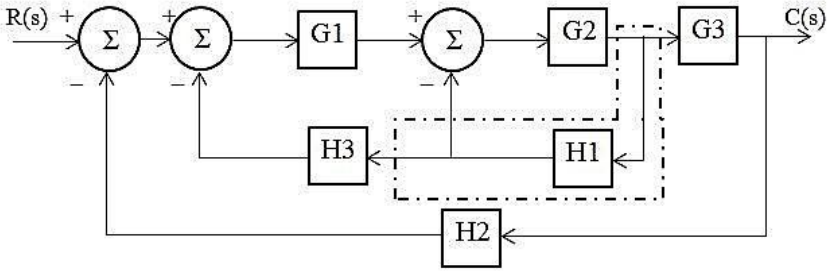

Step 2: Eliminating the feedback paths.

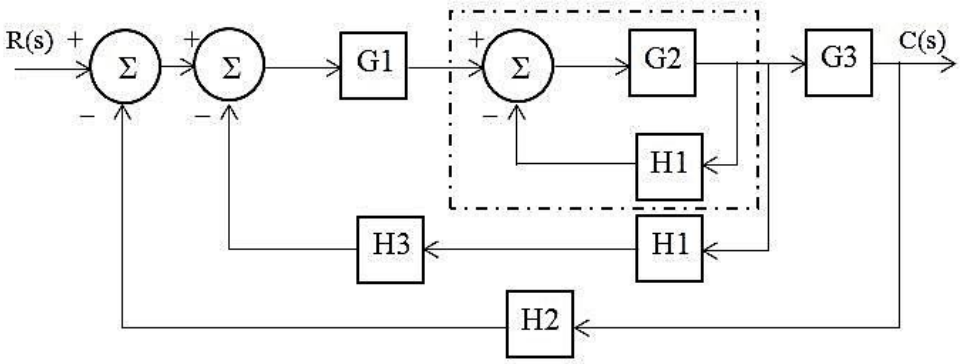

Step 3: Combining the blocks in cascade.

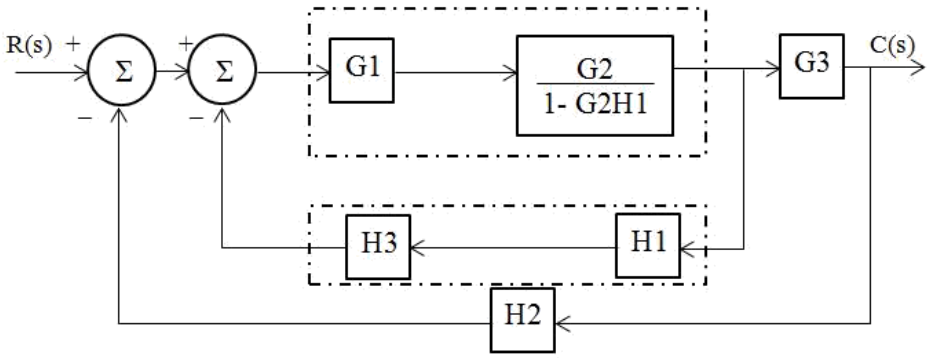

Step 4: Eliminating the feedback path

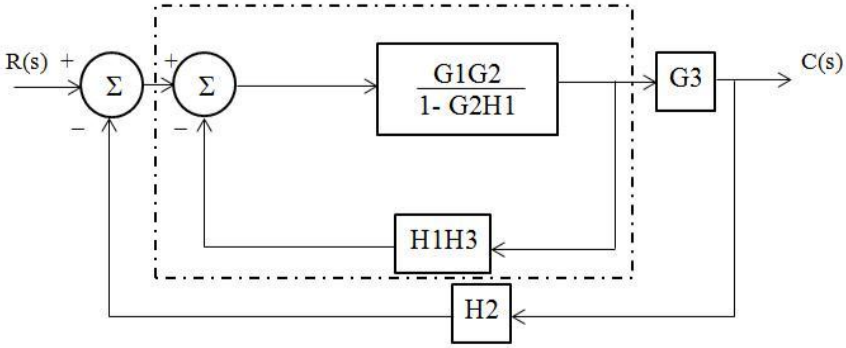

$$= \frac{\dfrac{G2G2}{1- G2H1}}{1+ \dfrac{G1G2}{1- G2H1} \times H3H1}$$

$$= \frac{G1G2}{1- G2H1+ G1G2H3H1}$$

Step 5: Combining the blocks in cascade.

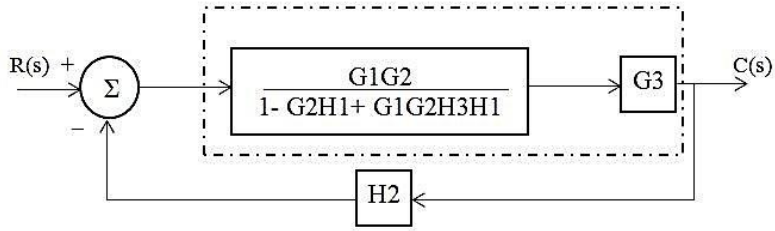

Step 6: Eliminating the feedback path

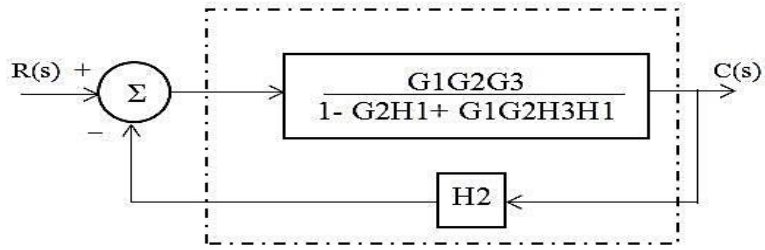

$$= \frac{G1G2G3}{1- G2H1+ G1G2H3H1}$$

$$1+ \frac{G1G2G3}{G2H1+G1G2H3H1}$$

$$= \frac{C(s)}{R(s)} = \frac{G1G2G3}{1- G2H1+G1G2H3H1+ G1G2G3H2}$$

2. For the block diagram shown below, find the output C due to R and disturbance D.

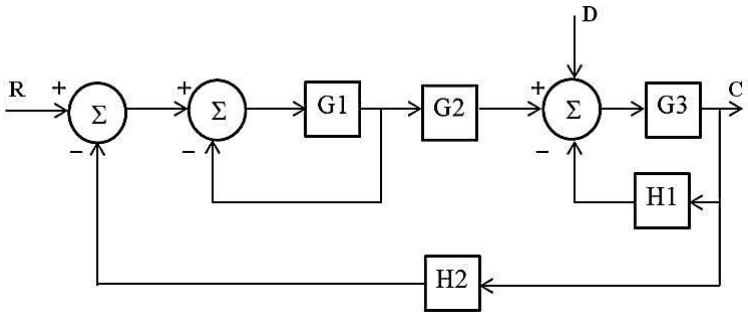

Step 1: Assuming D = 0, the block diagram becomes as shown in the figure below.

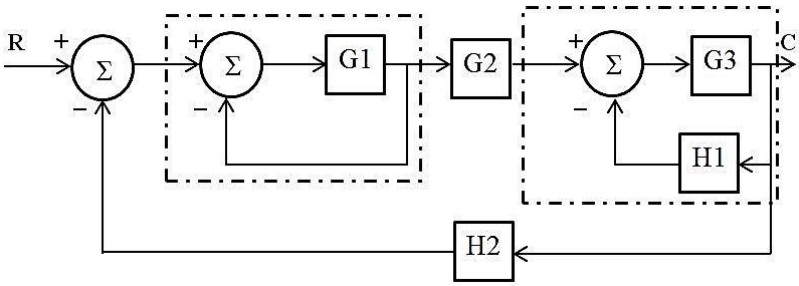

Step 2: Eliminating the feedback paths.

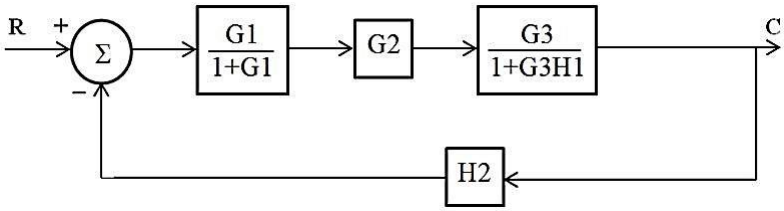

Step 3: The three forward path blocks and the feedback block is combined to give the transfer function.

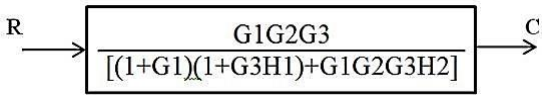

Step 4: Assuming R = 0 the block diagram in the question becomes

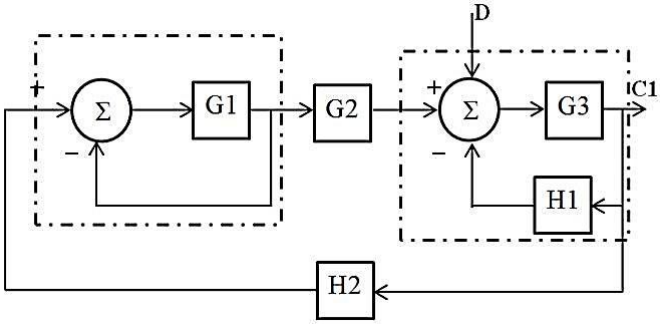

Step 5: The two feedback loops are eliminated.

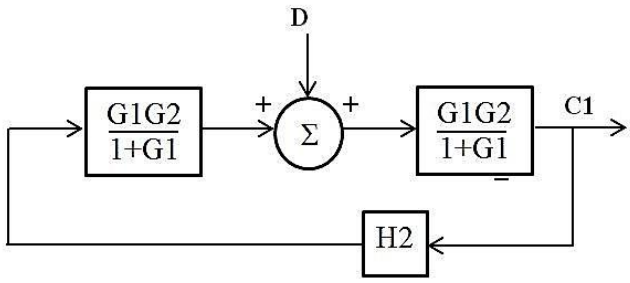

Step 6: The block diagram can be redrawn as

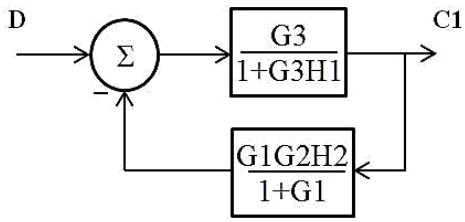

Step 7: The block diagram can be reduced to give the transfer function as shown.

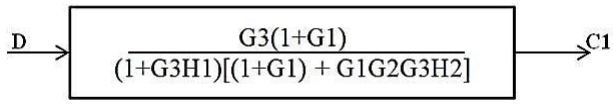

Step 8: When D = 0 output is C and is given below

$$C = \frac{RG1G2G3}{[(1+G1)(1+G3H1)+G1G2G3H2]}$$

When R = 0 the output is C1 and is given by

$$C1 = \frac{DG3(1+G1)}{[(1+G1)(1+G3H1)+G1G2G3H2]}$$

When R and D are simultaneously present the output is O = C + C1

$$O = \frac{G3[RG1G2+D(1+G1)]}{[(1+G1)(1+G3H1)+G1G2G3H2]}$$

3.For the system represented by the block diagram shown in figure, Determine the transfer function C1/R1 and C2/R1.

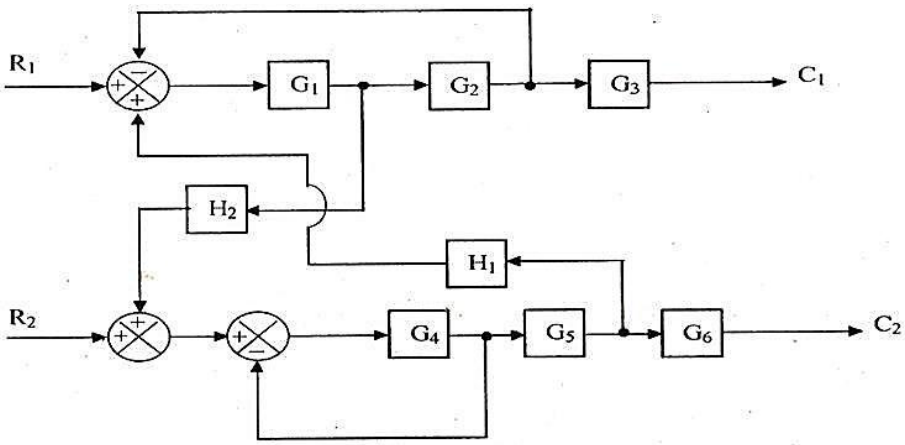

Solution:

Case 1: To find C_1/R_1. Consider R2 and C2 to be zero.

Step 1: Eliminate the feedback path.

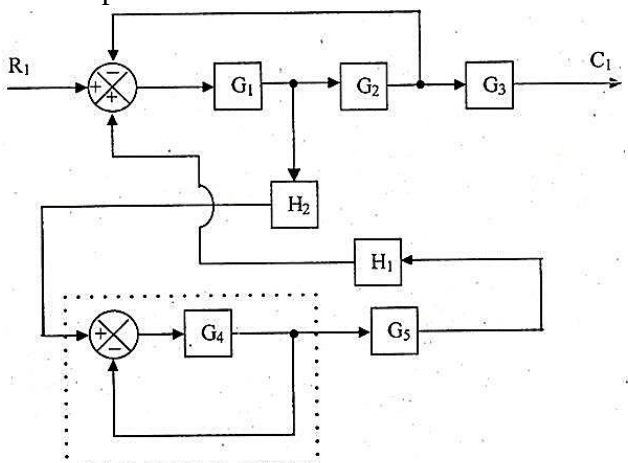

Step 2: Combining blocks in cascade and the summing point.

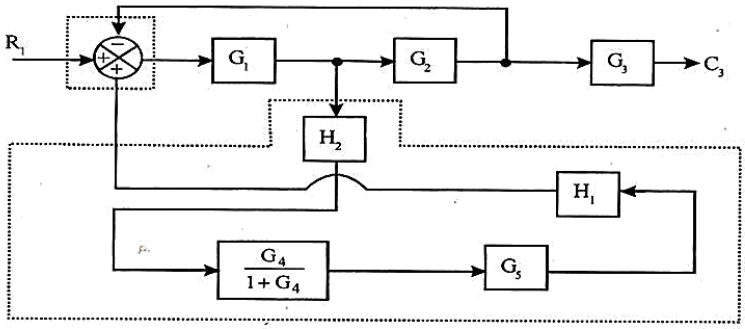

Step 3: Eliminate the feedback path.

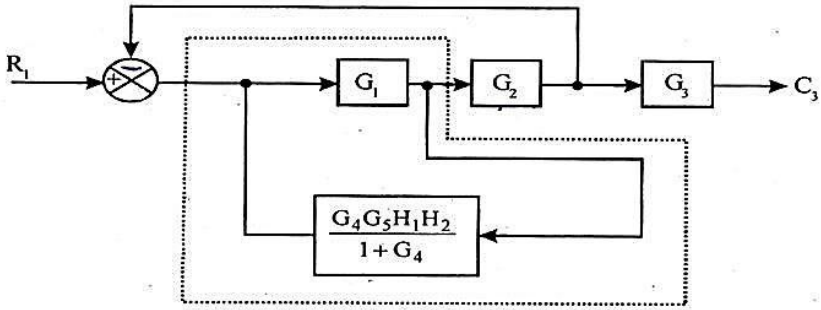

Step 4 : Combining the blocks in cascade

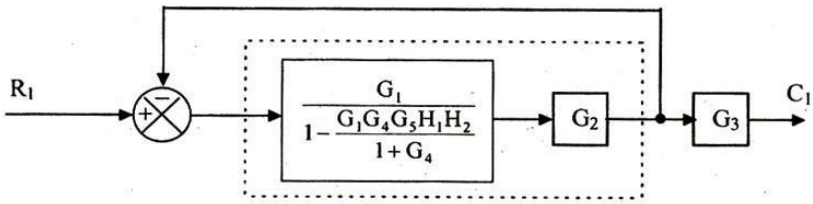

Step 5: Eliminate the feedback path.

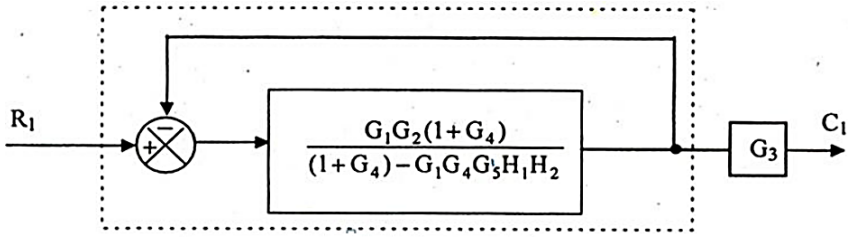

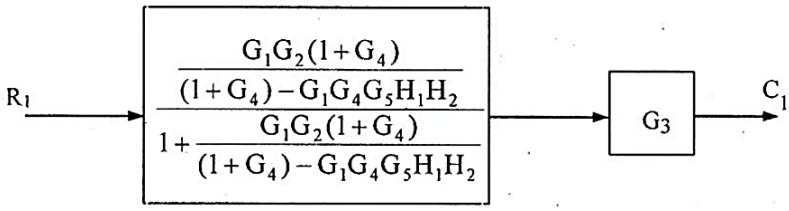

Step 6 : Combining the blocks in cascade

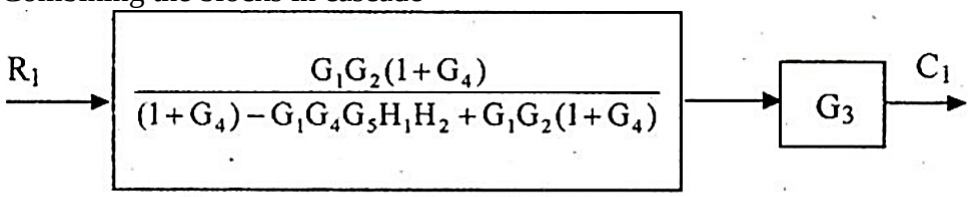

$$\frac{C_1}{R_1} = \frac{G_1G_2G_3(1+G_4)}{(1+G_1G_2)(1+G_4) - G_1G_4G_5H_1H_2}$$

Case 2: To find C_2/R_1. Consider R2 and C1 to be zero

Step 1: Eliminate the feedback path.

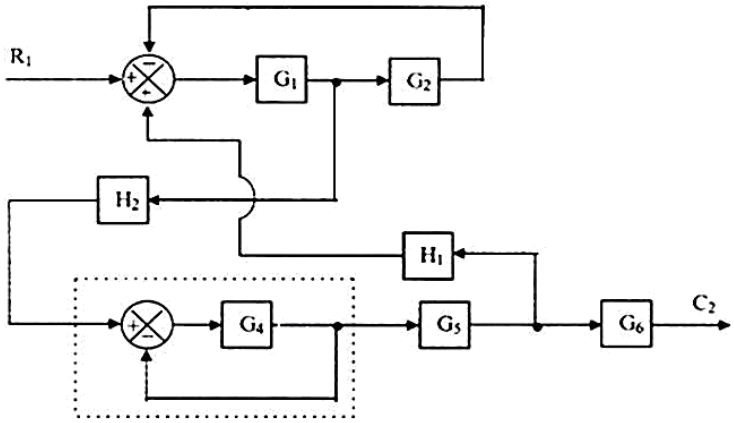

Step 2: Combining blocks in cascade and the summing point.

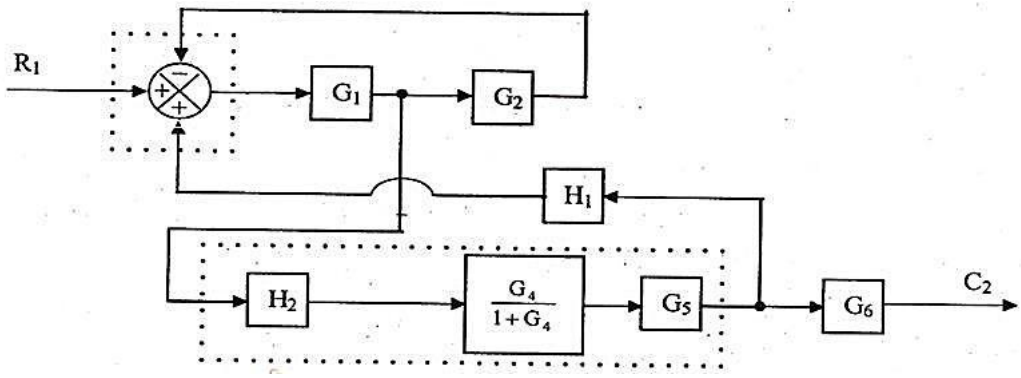

Step 3: Eliminate the feedback path.

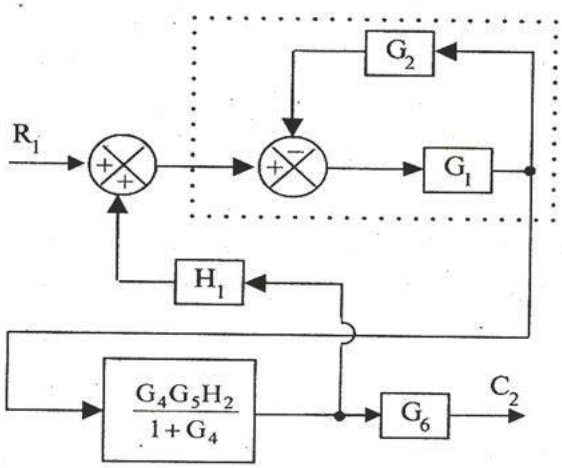

Step 4 : Combining the blocks in cascade

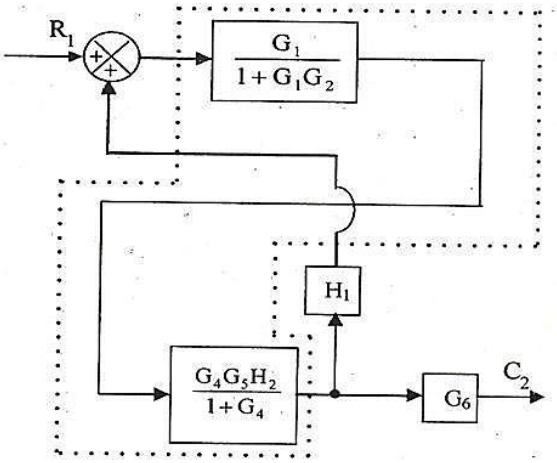

Step 5: Eliminate the feedback path.

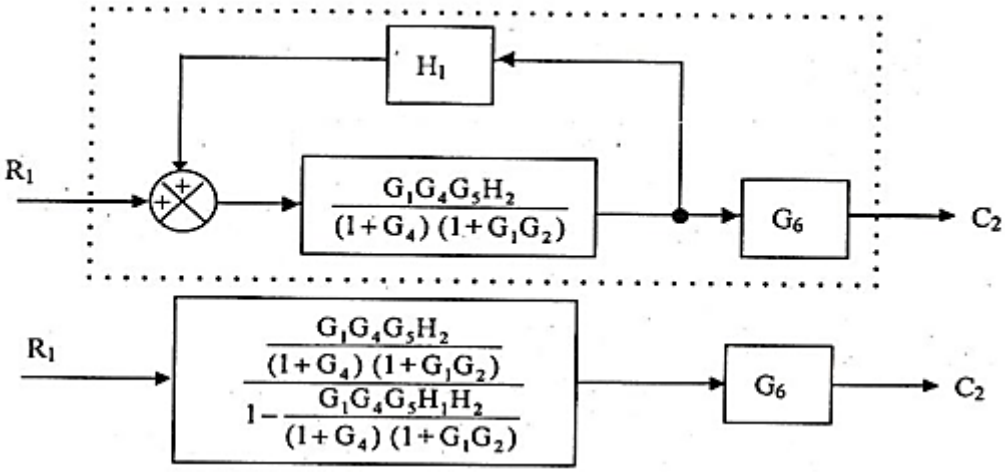

Step 6 : Combining the blocks in cascade

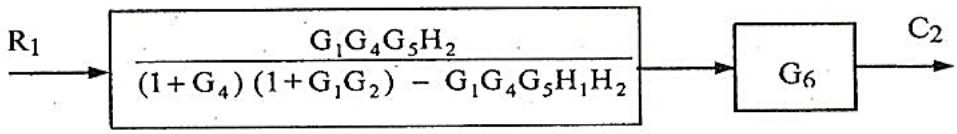

$$\frac{C_2}{R_1} = \frac{G_1G_4G_5G_6H_2}{(1+G_4)(1+G_1G_2) - G_1G_4G_5H_1H_2}$$

SIGNAL FLOW GRAPH

Signal-flow graphs represent transfer functions as lines, and signals as small circular nodes. Summing is implicit. Thus, the main advantage signal-flow graphs over block diagrams, is that they can be drawn more quickly, they are more compact, and they emphasize the state variables.

Signal-flow graphs are an alternative to block diagrams. Unlike block diagrams, which consist of blocks, signals, summing junctions, and pickoff points, a signal-flow graph consists only of *branches,* which represent systems, and *nodes,* which represent signals.

Mason's rule for reducing a signal-flow graph to a single transfer function requires the application of one formula. The formula was derived by S. J. Mason when he related the signal-flow graph to the simultaneous equations that can be written from the graph *(Mason, 1953).* In general, it can be complicated to implement the formula without making mistakes.

Specifically, the existence of what we will later call nontouching loops increases the complexity of the formula. However, many systems do not have nontouching loops. For these systems, you may find Mason's rule easier to use than blockdiagram reduction. Mason's formula has several components that must be evaluated. First, we must be sure that the definitions of the

components are well understood. Then we must exert care in evaluating the components with example then discuss the Mason‟s Gain formula.

Loop gain. The product of branch gains found by traversing a path that starts at a node and ends at the same node, following the direction of the signal flow, without passing through any other node more than once. For example,

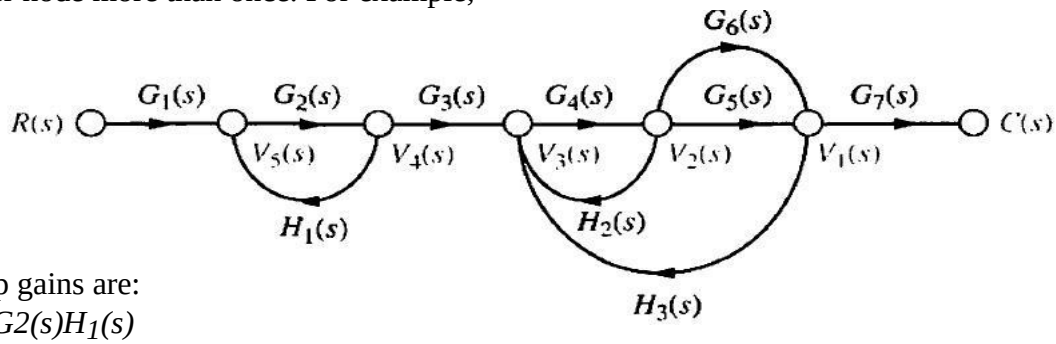

The loop gains are:

1. *G2(s)H$_1$(s)*
2. *G4{s)H2{s)*
3. *G4(s)G5(s)H3(s)*
4. *G4(s)G6(s)H3(s)*

Forward-path gain: The product of gains found by traversing a path from the input node to the output node of the signal-flow graph in the direction of signal flow.

1. *G1(s)G2(s)G3(s)G4(s)G5(s)G7(s)*
2. *G1(s)G2(s)G3(s)G4(s)G6(s)G7(s)*

Non touching loops : Loops that do not have any nodes in common. Loop G2(s)H1(s) does not touch loops G4(s)H2(s), G4(s)G5(s)H3(s) and G4(s)G6(s)H3(S)

Mason's Rule

The transfer function, T=*C(s)/R(s)*, of a system represented by a signal-flow graph is

$$T=\frac{1}{\Delta}\sum_{K} PK\Delta K$$

T= T(s) = Transfer function of the system
K= Number of forward path
P_k = Forward path gain of kth forward path

Δ=1−(sum of all individual loopgains)
+(sum of gain products of all possible two nontouching loops)
−(sum of gain products of all possible threen ontouchingloops)+...

$\Delta k = \Delta$ for that part of the graph which is not touching k th forward path

Signal Flow Graph Algebra

Rule 1: Incoming signal to a node through a branch is given by the product of a signal at previous node and the gain of the branch.

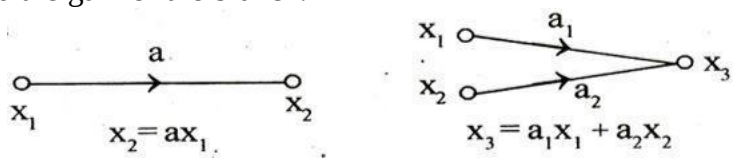

Rule 2: Cascade branches can be combined to give a single branch whose transmittance is equal to the product of individual branch transmittance.

Rule 3: Parallel branch may be represented by single branch whose transmittance is the sum of individual branch transmittance.

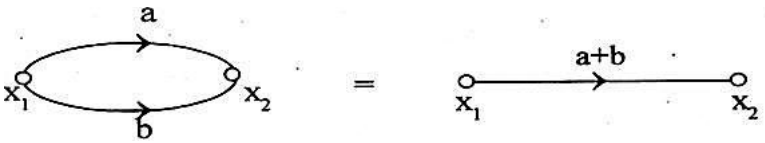

Rule 4: A mixed node can be eliminated by multiplying the transmittance of outgoing branch (from the mixed node) to the transmittance of all incoming branches to the mixed node.

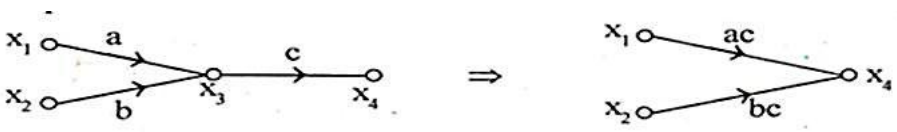

Rule 5: A loop may be eliminated by writing equations at the input and output node and rearranging the equation to find the ratio of output to input. This ratio gives the gain of resultant branch.

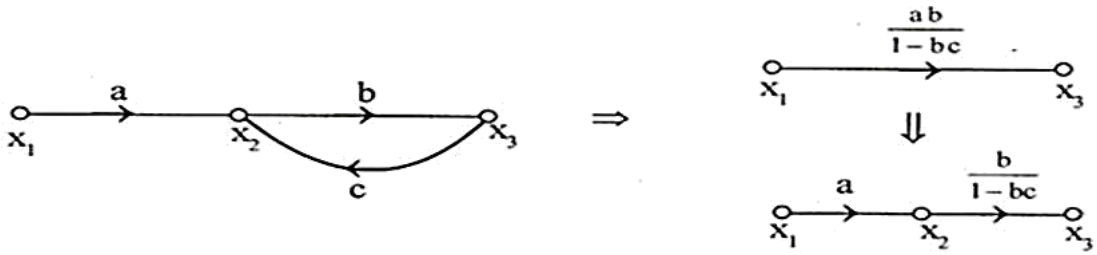

Steps to construct the Signal Flow Graph:

The Signal flow graph is constructed from its describing equations, or by direct reference to block diagram of the system. Each variable of the block diagram becomes a node and each block becomes a branch. The general procedure is

1. Arrange the input to output nodes from left to right
2. Connect the nodes by appropriate branches,
3. If the desired output node has outgoing branches, add a dummy node and a unity gain branch.
4. Rearrange the node and/or loops in the graph to achieve pictorial clarity.

Examples:

1. Determine the transfer function of the system using Mason's Gain formula.

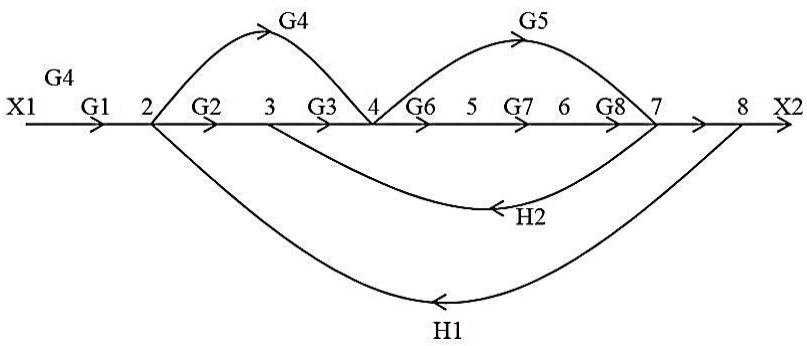

Step 1: There are four forward paths P1, P2, P3, P4; K = 4.

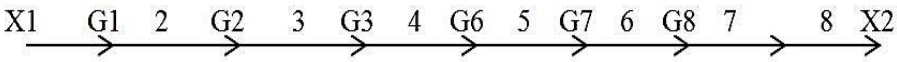

P1 = G1G2G3G6G7G8

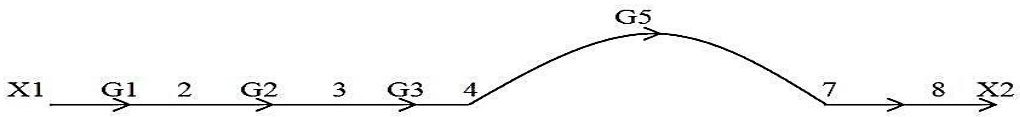

P2 = G1G2G3G5G8

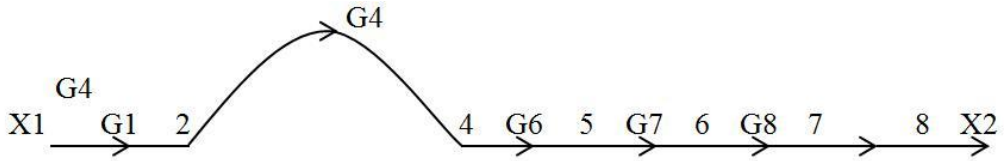

P3 = G1G4G6G7G8

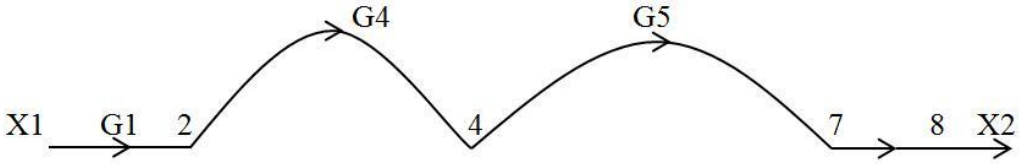

P4 = G1G4G5G8

Step 2: There are 5 individual loops

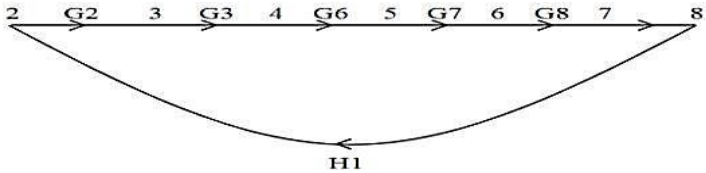

P11 = G2G3G6G7G8H1

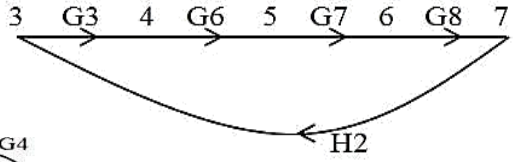

P21 = G3G6G7H2

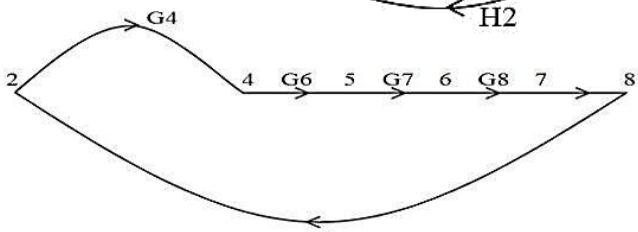

P31 = G4G6G7G8H1

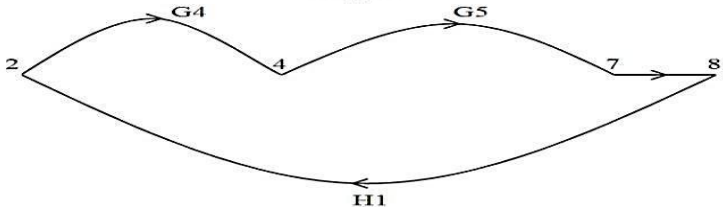

P41 = G4G5G8H1

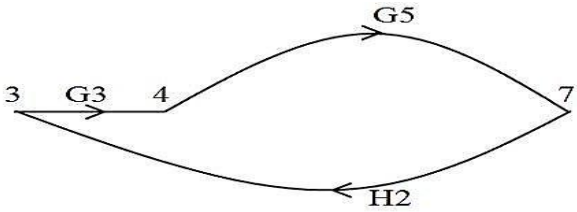

P51 = G3G5H2

Step 4: There are no combination of two non-touching loops.

Step 5: Calculation of and ΔK

= 1 – (P11 + P21 +P31 + P41 + P51)

=1 – (G2G3G6G7G8H1 + G3G6H7H2 + G4G6G7G8H1 + G4G5G8H1 + G3G5H2)

There is no part of the graph touching with 1st forward path; $\Delta 1 = 1$
There is no part of the graph touching with 2nd forward path; $\Delta 1 = 1$
There is no part of the graph touching with 3rd forward path; $\Delta 1 = 1$
There is no part of the graph touching with 4th forward path; $\Delta 1 = 1$

Step 6: Determination of transfer function.
By Masons gain formula the transfer function is given by

$$T = \frac{1}{\Delta} \sum_K PK\Delta K$$

$$= 1/\Delta(P1\Delta 1+P2\Delta 2+P3\Delta 3+P4\Delta 4)$$

$$= \frac{G1G2G3G6G7G8+G1G2G3G5G8+G1G4G6G7G8+G1G4G5G8}{1- G2G3G6G7G8H1+G3G6H7+G4G6G7G8H1+G4G5G8H1+G3G5H2}$$

2.Use Masons gain formula to obtain C(S)/R(s) of the system shown below by using signal flow graph.

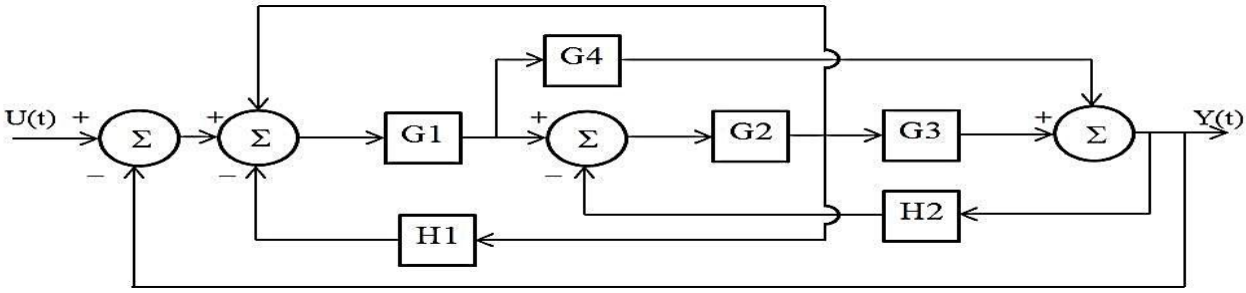

Step 1: The equivalent signal flow graph is given by

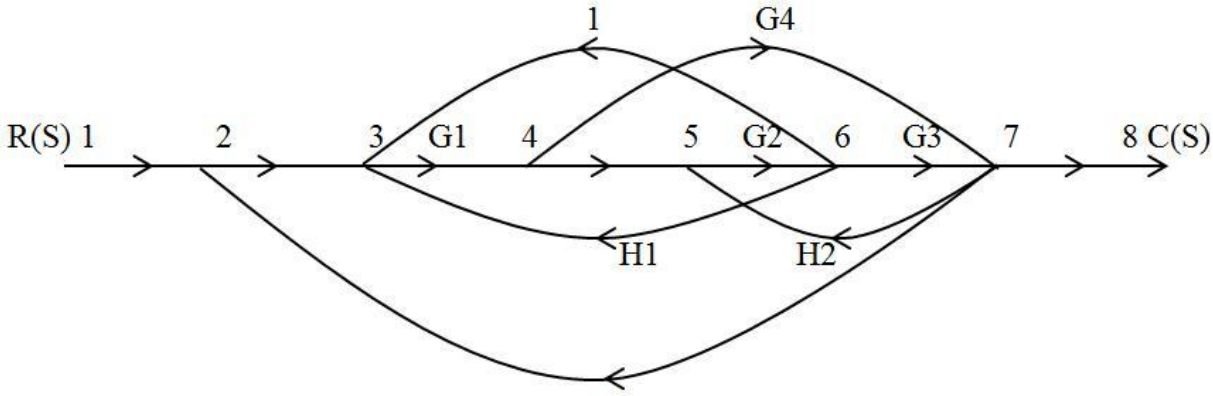

Step 2: There are two forward paths P1 and P2; K = 2

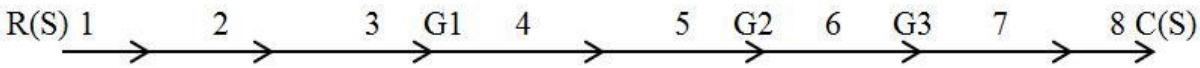

P1 = G1G2G3

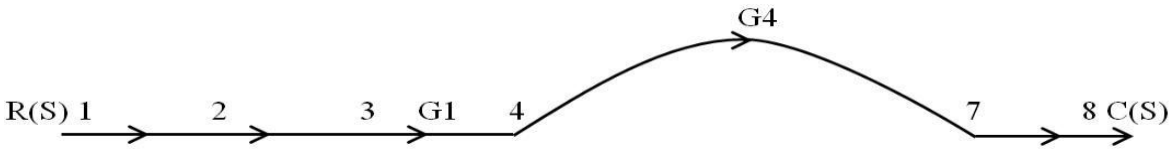

P2 = G1G4

Step 3: There are 4 individual loops. Let the four loops be P11, P21, P31, P41

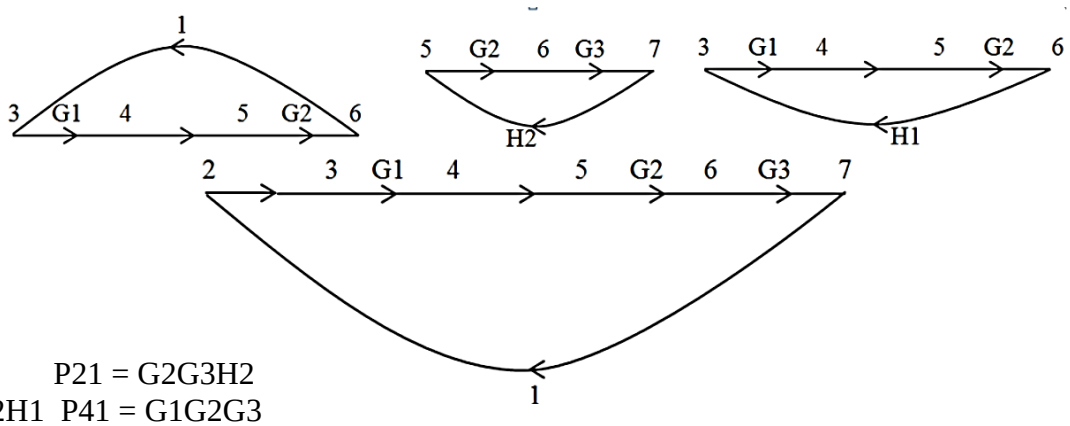

P11 = G1G2 P21 = G2G3H2
P31 = G1G2H1 P41 = G1G2G3
Step 3: Gain product of 2 non touching loops There are no 2 non touching loops. Step 4: Calculation of and ΔK

= 1 – (P11 + P21 + P31 + P41)
= 1 – G1G2 – G2G3H2 – G1G2H1 – G1G2G3
Δ1=1–0=1
Δ2=1
Step 5: Determination of transfer function

$$T=\frac{1}{\Delta}\sum_{K} PK\Delta K$$

= 1/Δ(P1Δ1+P2Δ2)

$$= \frac{G1G2G3 + G1G4}{1- G1G2 - G2G3H2 - G1G2H1- G1G2G3}$$

3.The signal flow graph for a feedback control system is shown in the figure. Determine the closed loop transfer function C(s)/R(s).

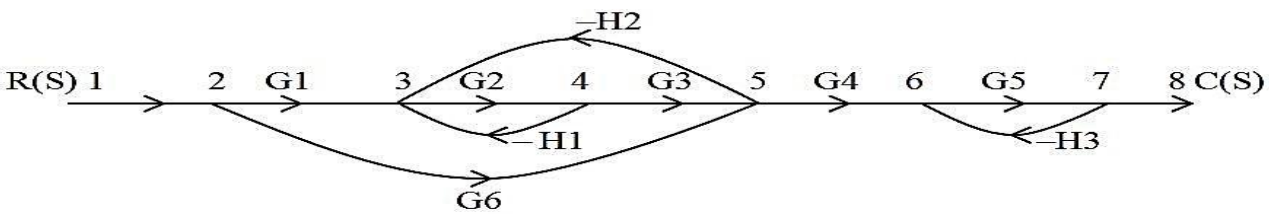

Step 1: Forward path gains
There are two forward paths K = 2

Let forward path gains be P1 and P2

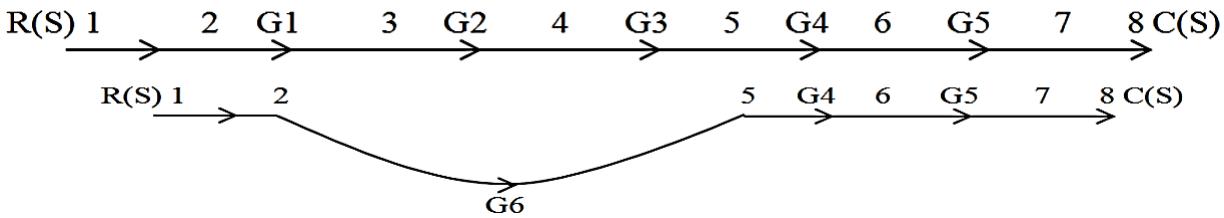

Gain forward path 1 = P1 = G1G2G3G4G5
Gain forward path 2 = P2 = G4G5G6
Step 2: Individual loop gain

There are three individual loops. Let individual loop gains be P11, P21, P31

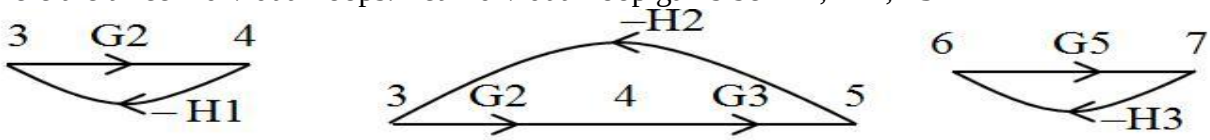

Loop gain of individual loop 1 = P11 = –G2H1
Loop gain of individual loop 2 = P12 = –G2G3H2
Loop gain of individual loop 3 = P31 = –G5H3

Step 3: Gain products of two non-touching loops
There are two combinations of two non-touching loops. Let the gain products of two non-touching loops be P12 and P22.

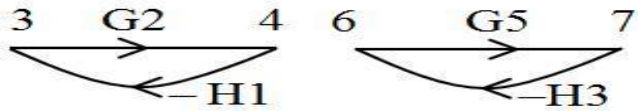

Gain product of 1st combination of two non-touching loops
P12 = P11P31 = (–G2H1)(–G5H3) = G2G5H1H3
Gain product of 2nd combination of two non-touching loops
P22= P21P31= (–G2G3H2)(–G5H3)= G2G3G5G3H2H3

Step 4: Calculation of and ΔK
= 1– (P11 + P21 + P31) + (P12 + P22)
= 1– (–G2H1–G2G3H2–G5H3) + (G2G5H1H3 + G2G3G5G3H2H3)
= 1 + G2H1+G2G3H2+G5H3 + G2G5H1H3 + G2G3G5G3H2H3
Δ1 = 1, since there is no part of the graph which is not touching with first forward path The part of the graph which is not touching with the second forward path is shown below.

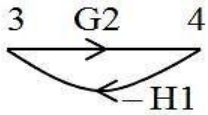

Δ2 = 1–P11 = 1 – (– G1H1) = 1+G2H1
Step 5: Transfer function T
By Mason‟s gain formula the transfer function T is given by,

$$T = (1/\Delta).\sum PK\Delta K$$

$$= (1/\Delta)(P1\Delta1+P2\Delta2)$$ No of forward path is 2, K = 2

$$= \frac{G1G2G3G4G5+G4G5G6(1+G2H1)}{1+G2H1+G2G3H2+G5H3+G2G5H1H3+G2G3G5H2H3}$$

$$= \frac{G1G2G3G4G5+G4G5G6+G4G5G6G2H1)}{1+G2H1+G2G3H2+G5H3+G2G5H1H3+G2G3G5H2H3}$$

$$= \frac{G2G4G5[G1G3+G6/G2+G6H1]}{1+G2H1+G2G3H2+G5H3+G2G5H1H3+G2G3G5H2\ H3}$$

Servomechanism

A servo system mainly consists of three basic components - a controlled device, a output sensor, a feedback system. This is an automatic closed loop control system. Here, instead of controlling a device by applying the variable input signal, the device is controlled by a feedback signal generated by comparing output signal and reference input signal. When reference input signal or command signal is applied to the system, it is compared with output reference signal of the system produced by output sensor, and a third signal produced by a feedback system. This third signal acts as an input signal of controlled device.

This input signal to the device presents as long as there is a logical difference between reference input signal and the output signal of the system. After the device achieves its desired output, there will be no longer the logical difference between reference input signal and reference output signal of the system. Then, the third signal produced by comparing theses above said signals will not remain enough to operate the device further and to produce a further output of the system until the next reference input signal or command signal is applied to the system. Hence, the primary task of a servomechanism is to maintain the output of a system at the desired value in the presence of disturbances.

DC SERVO MOTOR

The motors which are utilized as DC servo motors generally have separate DC source for field winding and armature winding. The control can be achieved either by controlling the field current or armature current.

Armature Controlled DC Servo Motor

Theory:

The figure below shows the schematic diagram for an armature controlled DC servo motor. Here the armature is energized by amplified error signal and field is excited by a constant current source.

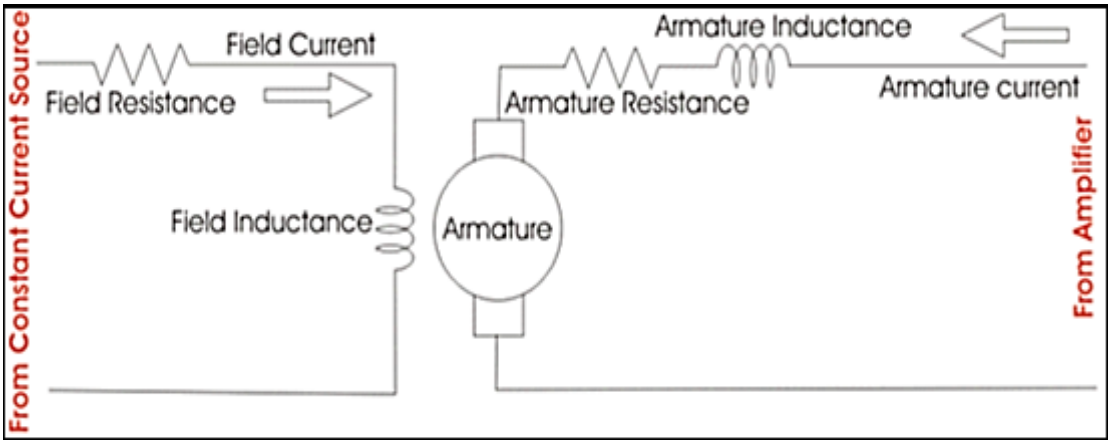

The field is operated at well beyond the knee point of magnetizing saturation curve. In this portion of the curve, for huge change in magnetizing current, there is very small change in mmf in the motor field. This makes the servo motor is less sensitive to change in field current. Actually for armature controlled DC servo motor, the motor should response to any change of field current.

Again, at saturation the field flux is maximum. The general torque equation of DC motor is, torque $T \propto \varphi I_a$. Now if φ is large enough, for every little change in armature current I_a there will be a prominent changer in motor torque. That means servo motor becomes much sensitive to the armature current.

As the armature of DC motor is less inductive and more resistive, time constant of armature winding is small enough. This causes quick change of armature current due to sudden change in armature voltage. That is why dynamic response of armature controlled DC servo motor is much faster than that of field controlled DC servo motor.

The direction of rotation of the motor can easily be changed by reversing the polarity of the error signal.

Transfer Function:

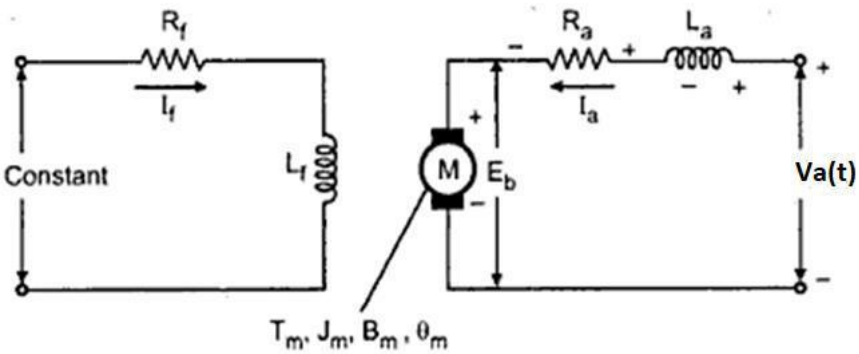

Let

R_a = Armature resistance, Ω

L_a = Armature Inductance, H

I_a = Armature current, A

V_a = armature voltage, V

E_b = back emf, V,K_t = Torque constant, N-m/A

T = Torque developed by motor, N-m

θ = Angular displacement of shaft, rad

J = Moment of inertia of motor and load, Kg-m^2

B = Frictional coefficient of motor and load, N-m/(rad/sec)

K_b = Back emf constant, V/(rad/sec)

The differential equation of armature circuit is

$$L_a \frac{di_a}{dt} + R_a i_a + e_b = V_a$$

Taking Laplace transform we get

$$L_a SI_a(s) + R_a I_a(s) + E_b(s) = V_a(s)$$

$$I_a(s)(L_a S + R_a) + E_b(s) = V_a(s)$$

$$I_a(s)(L_a S + R_a) = V_a(s) - E_b(s)$$

$$I_a(s) = \frac{V_a(s) - E_b(s)}{(L_a S + R_a)} \qquad [1]$$

Torque developed by motor is proportional to flux and current

$$T \alpha\, i_a \phi$$

$$T = K_T\, i_a$$

$$I_a(s) = \frac{T(s)}{K_T} \qquad [2]$$

According to Newton‟s second law the Rotational mechanical differential equation is given by

$$J\frac{d^2\theta}{dt^2} + B\frac{d\theta}{dt} = T$$

Taking Laplace transform

$$JS^2\theta(s) + BS\theta(s) = T(s) \qquad [3]$$

Also the back emf is proportional to the speed of shaft (Angular velocity)

$$e = K_b \frac{d\theta}{}$$

$_b$

$$E_b(s) = K_b S\theta(s) \qquad [4]$$

Combining equation [1] and [3], we get

$$\frac{T(s)}{K_T} = \frac{V_a(s) - E_b(s)}{(L_a S + R_a)}$$

$$T(s) = \frac{K_T V_a(s) - K_T E_b(s)}{(L_a S + R_a)}$$

Substituting [3] we get

$$JS^2\theta(s) + BS\theta(s) = \frac{K_T V_a(s) - K_T E_b(s)}{(L_a S + R_a)}$$

$$\theta(s)(JS^2 + BS)(L_a S + R_a) = K_T V_a(s) - K_T E_b(s)$$

$$K_T V_a(s) = [\theta(s)(JS^2 + BS)(L_a S + R_a)] + K_T E_b$$

(s) Substituting [4] we get

$$K_T V_a(s) = [\theta(s)(JS^2 + BS)(L_a S + R_a)] + K_T K_b S\theta(s)$$

$$K_T V_a(s) = \theta(s)[(JS^2 + BS)(L_a S + R_a) + K_T K_b S]$$

$$\frac{\boldsymbol{\theta(s)}}{\mathbf{V(s)}} = \frac{\boldsymbol{K_T}}{(\mathbf{Js^2 + Bs})(\boldsymbol{L_a s + R_a}) + \boldsymbol{K_T K_b s}}$$

$$\frac{\boldsymbol{\theta(s)}}{\mathbf{V(s)}} = \frac{\boldsymbol{K_T}}{(\mathbf{J}\boldsymbol{L_a}\mathbf{s^3}) + \mathbf{s^2}(\boldsymbol{L_a B + JR_a}) + \boldsymbol{s}(\boldsymbol{BR_a + K_T K_b})}$$

Block Diagram:

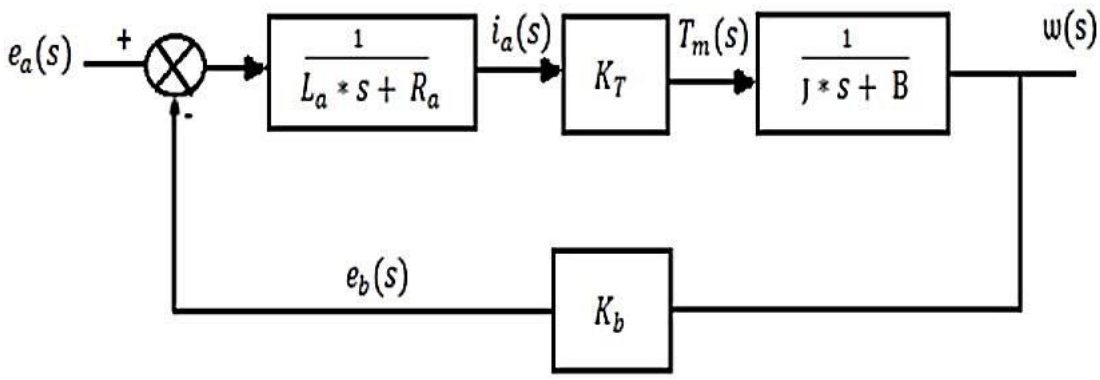

Field Controlled DC Servo Motor Theory

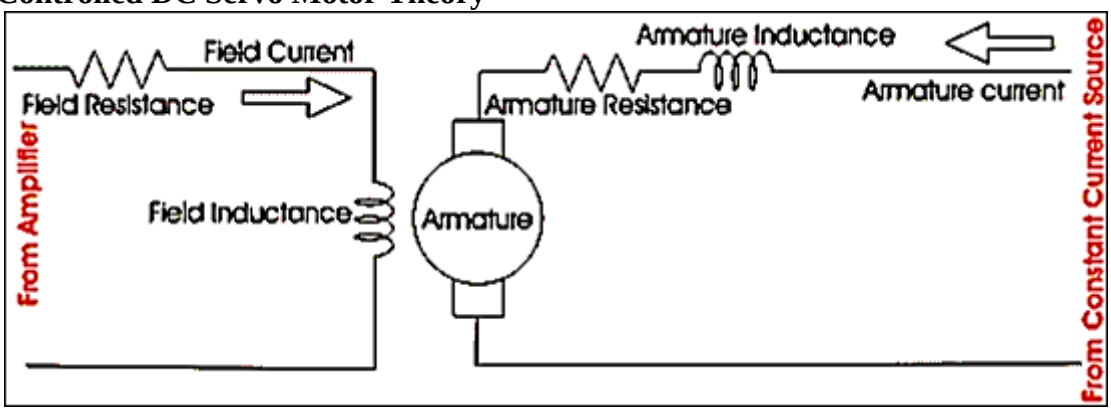

The figure illustrates the schematic diagram for a field controlled DC servo motor. In this arrangement the field of DC motor is excited be the amplified error signal and armature winding is energized by a constant current source . The field is controlled below the knee point of magnetizing saturation curve. At that portion of the curve the mmf linearly varies

with excitation current. That means torque developed in the DC motor is directly proportional to the field current below the knee point of magnetizing saturation curve.

From general torque equation of DC motor it is found that, torque $T \propto \varphi I_a$. Where, φ is field flux and I_a is armature current. But in field controlled DC servo motor, the armature is excited by constant current source, hence I_a is constant here. Hence, $T \propto \varphi$

As field of this DC servo motor is excited by amplified error signal, the torque of the motor i.e. rotation of the motor can be controlled by amplified error signal. If the constant armature current is large enough then, every little change in field current causes corresponding change in torque on the motor shaft. The direction of rotation can be changed by changing polarity of the field. The direction of rotation can also be altered by using split field DC motor, where the field winding is divided into two parts, one half of the winding is wound in clockwise direction and other half in wound in anticlockwise direction. The amplified error signal is fed to the junction point of these two halves of the field as shown in the figure. The magnetic field of both halves of the field winding opposes each other. During operation of the motor, magnetic field strength of one half dominates other depending upon the value of amplified error signal fed between these halves. Due to this, the DC servo motor rotates in a particular direction according to the amplified error signal voltage.

The main disadvantage of field control DC servo motors, is that the dynamic response to the error is slower because of longer time constant of inductive field circuit. The field is an electromagnet so it is basically a highly inductive circuit hence due to sudden change in error signal voltage, the current through the field will reach to its steady state value after certain period depending upon the time constant of the field circuit. That is why field control DC servo motor arrangement is mainly used in small servo motor applications. The main advantage of using field control scheme is that, as the motor is controlled by field - the controlling power requirement is much lower than rated power of the motor.

Transfer Function:

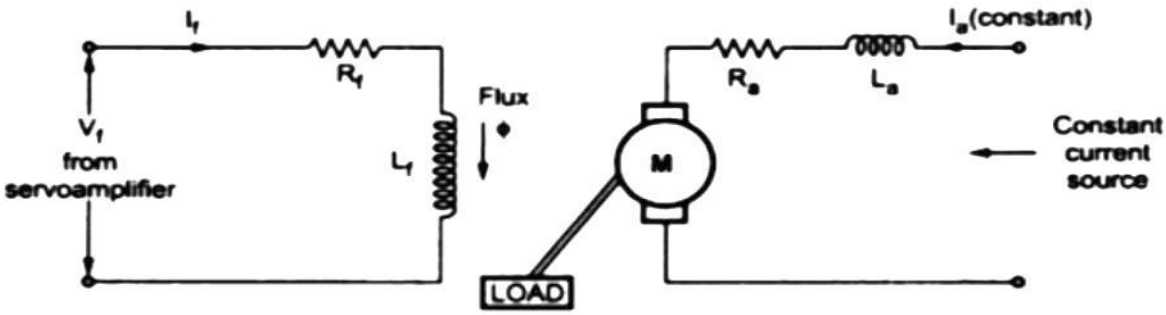

Let

R_f = Field resistance, Ω

L_f= Field inductance, H

I_f = Field current, A

V_f = Field voltage, V

T = Torque developed by motor, N-m

K_{tf} = Torque constant, N-m/A

J = Moment of inertia of rotor and load, Kg-m^2/rad

B = Frictional coefficient of rotor and load, N-m/(rad/sec)

$T \alpha \; i_a i_f$

$T = K_{TF} \, i_f$

$T(s) = K_{TF} \, I_f(s)$ [1]

The differential equation of armature circuit is

$$L_f \frac{di_f}{dt} + R_f i_f = e_f$$

$$L_f S I_f(s) + R_f I_f(s) = E_f(s)$$

$I_f(s)(L_f S + R_f) = E_f(s)$ [2]

According to Newton"s second law the Rotational mechanical differential equation is given by

$$J \frac{d^2\theta}{dt^2} + B \frac{d\theta}{dt} = T$$

Taking Laplace transform

$$JS^2\theta(s) + BS\theta(s) = T(s)$$

Substituting [1] we get,

$$JS^2\theta(s) + BS\theta(s) = K_{TF} \, I_f(s)$$

$$I_f(s) = \frac{\theta(s)(JS^2 + BS)}{K_{TF}}$$

Substituting [4] in [2] we get,

$$\frac{\theta(s)(JS^2 + BS)}{K_{TF}}(L_f S + R_f) = E_f(s)$$

$$\frac{\theta(s)}{E_f(s)} = \frac{K_{TF}}{(JS^2 + BS)(L_f S + R_f)}$$

AC SERVOMOTOR

An AC servo motor is essentially a two phase induction motor with modified constructional features to suit servo applications.The schematic of a two phase or servo motor is shown

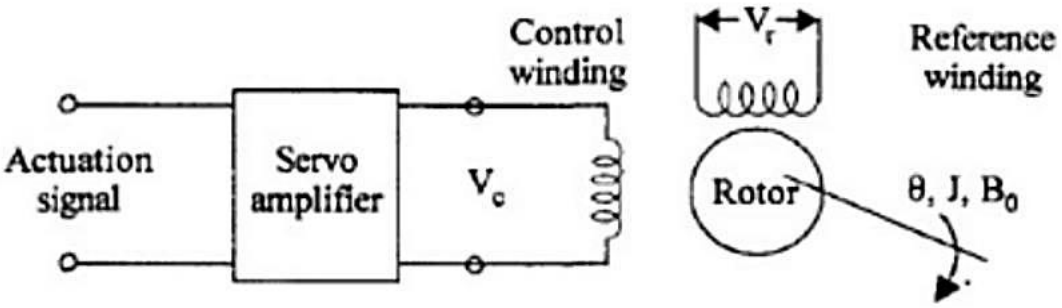

It has two windings displaced by 90^oon the stator One winding, called as reference winding, is supplied with a constant sinusoidal voltage.The second winding, called control winding, is supplied with a variable control voltage which is displaced by -- 90° out of phase from the reference voltage.The major differences between the normal induction motor and an AC servo motor are

- The rotor winding of an ac servo motor has high resistance (R) compared to its inductive reactance (X) so that its X / *R* ratio is very low.
- For a normal induction motor, X / *R* ratio is high so that the maximum torque is obtained in normal operating region which is around 5% of slip.

  The torque speed characteristics of a normal induction motor and an ac servo motor

are shown in fig

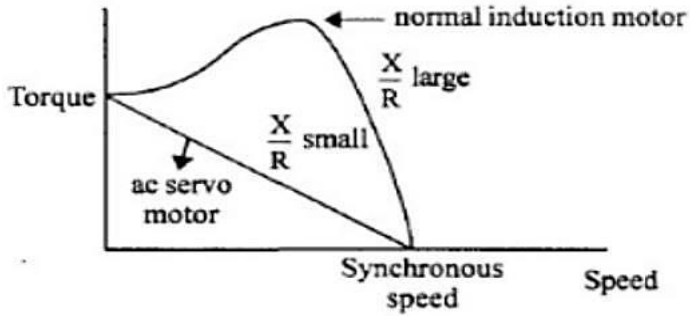

The Torque speed characteristic of a normal induction motor is highly nonlinear and has a positive slope for some portion of the curve. This is not desirable for control applications. as the positive slope makes the systems unstable. The torque speed characteristic of an ac servo motor is fairly linear and has negative slope throughout. The rotor construction is usually squirrel cage or drag cup type for an ac servo motor. The diameter is small compared to the length of the rotor which reduces inertia of the moving parts. Thus it has good accelerating characteristic and good dynamic response.

The supplies to the two windings of ac servo motor are not balanced as in the case of a normal induction motor. The control voltage varies both in magnitude and phase with respect to the constant reference vulture applied to the reference winding. The direction of rotation of the motor depends on the phase (± 90°) of the control voltage with respect to the reference voltage. For different rms values of control voltage the torque speed characteristics are shown in Fig.

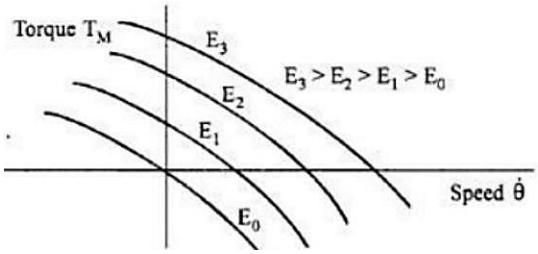

The torque varies approximately linearly with respect to speed and also controls voltage. The torque speed characteristics can be linearized at the operating point and the transfer function of the motor can be obtained.

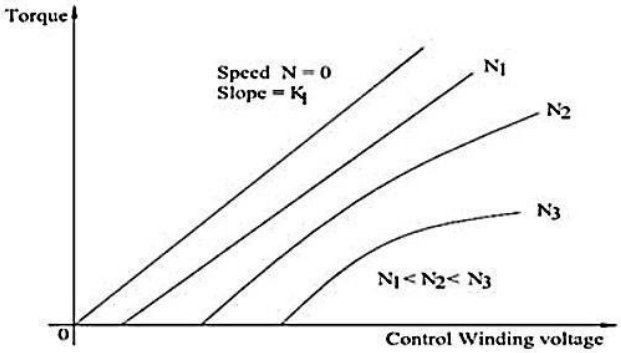

From the torque speed characteristics, we observe that even when Ec=0, the characteristics line runs through origin, which enables the stop of motor rapidly (decelerating torque). From torque-control voltage characteristics, we obtain that the high speed are nonlinear, so the AC servo motor is employed only for low speed.

With reference to the above characteristics, we assume that all lines are traight lines parallel to each other at rated input voltage ad are equally spaced for equal increments of input voltage.Under this assumption, the torque developed by the motor is,

$$T_m = K_1 e_C - K_2 \frac{d\theta}{dt}$$

From the mechanical system we get,

$$T_m = J\frac{d^2\theta}{dt^2} + B\frac{d\theta}{dt}$$

At equilibrium the motor torque is equal to load torque

$$K_1 e_C - K_2 \frac{d\theta}{dt} = J\frac{d^2\theta}{dt^2} + B\frac{d\theta}{dt}$$

$$K_1 E_c(s) - K_2 S\theta(s) = JS^2\theta(s) + BS\theta(s)$$

$$K_1 Ec(s) = \theta(s)(JS^2 + BS + K_2 s)$$

$$\frac{\boldsymbol{\theta(s)}}{\boldsymbol{E_C(s)}} = \frac{\boldsymbol{K_1}}{(\mathbf{Js^2} + (\mathbf{B} + K_2)\mathbf{s})}$$

$$\frac{\boldsymbol{\theta(s)}}{\boldsymbol{E_C(s)}} = \frac{\frac{\boldsymbol{K_1}}{(\mathbf{B} + K_2)}}{\boldsymbol{S}\left(\frac{\mathbf{J}}{(\mathbf{B} + K_2)}\mathbf{S} + \mathbf{1}\right)}$$

Let $\boldsymbol{K_m} = \frac{\boldsymbol{K_1}}{(\mathbf{B}+K_2)}$ be the motor gain constant

$\boldsymbol{\tau_m} = \frac{\mathbf{J}}{(\mathbf{B}+K_2)}$ be the motor time constant

$$\frac{\boldsymbol{\theta(s)}}{\boldsymbol{E_C(s)}} = \frac{\boldsymbol{K_m}}{\boldsymbol{S}(\boldsymbol{\tau_m}\mathbf{S} + \mathbf{1})}$$

SYNCHROS

The other names for synchros are Selsyn and autosyn. It is an electromagnetic transducer that produces an output voltage depending upon the angular displacement.it consists of two devices called Synchro Transmitter and Synchro Receiver. It is mostly used as an error detector in control system.

Synchro Transmitter:

It is similar to a Y connected 3-phase alternator. Stator winding are concentric coils displaced 120deg apart. Rotor is a salient pole type wound with concentric coils excited with single phase AC through slip rings. The Synchro transmitter acts as a transformer with single primary winding (Rotor) and there secondary winding displaced apart from each other.

The flux produced by the rotor is displaced along its axis and distributed sinusoidally in the air gaps depending upon its angular positions with rotor. Therefore the flux linked with the stator winding will induce an emf proportional to the cosine of the angle between the rotor and stator winding.

AC voltage applied across rotor $Vr(t) = A\sin\omega t$ Phase voltage induced in stator coils S_1, S_2 and S_3 are

$Vs_1(t) = kA\sin\omega t\cos\theta$

$Vs_2(t) = kA\sin\omega t\cos(120 + \theta)$

$Vs_3(t) = kA\sin\omega t\cos(240 + \theta)$

Corresponding line voltage are

$$V_{L1} = Vs_2 - Vs_1$$
$$V_{L1} = kA\sin\omega t[\cos(120+\theta) - \cos\theta]$$
$$V_{L1} = kA\sin\omega t(2\sin(60+\theta)\sin 60)$$
$$V_{L1} = kA\sin\omega t\sqrt{3}\sin(60+\theta)$$
$$V_{L2} = Vs_3 - Vs_2$$
$$V_{L2} = kA\sin\omega t[\cos(240+\theta) - \cos(120+\theta)]$$
$$V_{L2} = kA\sin\omega t(\sin(180+\theta)\sin 60)$$
$$V_{L2} = \sqrt{3}kA\sin\omega t\sin(180+\theta)$$
$$V_{L3} = Vs_1 - Vs_3$$
$$V_{L3} = kA\sin\omega t[\cos\theta - \cos(240+\theta)]$$
$$V_{L3} = -2kA\sin\omega t(\sin(120+\theta)\sin 120)$$
$$V_{L3} = \sqrt{3}\ kA\sin\omega t\sin(300+\theta)$$

When θ=0; $Vs_1(t) = kA\sin\omega t$ and $V_{L2} = 0$

The position at which V_{s1} is maximum and V_{L0} is zero is known as "electrical zero" or reference point of transmitter. The output of Synchro control transformer is the error signal which is proportional to the angular displacement between the two rotor of Synchro control transformer and Synchro transmitter.

Synchro control transformer:

The control transformer is similar in construction to a Synchro transmitter except the rotor is cylindrical in shape so that the air gap is uniform. Stator of both transmitter and transformer are identical and the output of the transmitter is given as input to the stator of Synchro transformer. A voltage will be induced in the rotor of control transformer by transformer action. This voltage is proportional to the cosine of the angle between the two rotors.

Therefore, $e(t) = k' A\sin\omega t\cos\phi$

Where ϕ- angular displacement between two rotors

When ϕ=90; e(t)=0, that is error voltage is zero.

The position is known as electrical zero or reference.

Let the initial position of rotor be 90 deg out of phase as in figure

$$e(t) = k' A\sin\omega t\cos 90 = 0$$

Let rotor transmitter is displaced by an angle θ and rotor of control transformer displaced by an angle α. Then the net displacement between the rotor is (90+θ-α).

$$e(t) = k' A\sin\omega t\cos(90+\theta-\alpha) = k' A\sin\omega t\sin(\theta-\alpha)$$

For small angular displacement

$$e(t) = k' A(\theta-\alpha)\sin\omega t$$

Thus Synchro transmitter and control transformer acts as an error detector bygiving an error signal proportional to the angular difference between the transmitter and control transformer shaft position.

Input to the transmitter is a carrier signal error (θ-α) acts as modulating signal error signal e(t) is a modulating signal .

FEEDBACK AND FEEDFORWARD CONTROL THEORY

In feedback system, when a disturbance enters the system, the process deviates, the error is sensed from the feedback. The control action is based on the error signal. The main disadvantage is that only after the disturbance enters the process, the controlled variable is deviated, then only the corrective action is taken.

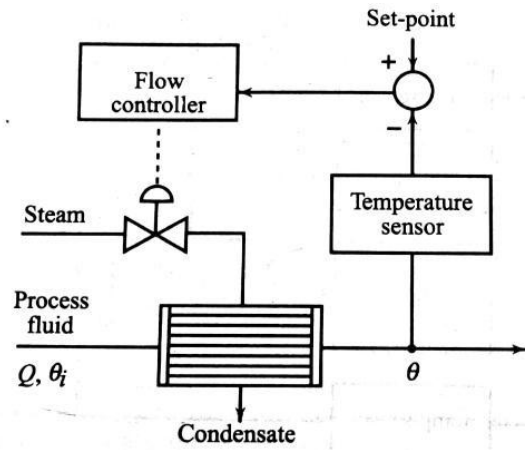

Fig: Feedback control

Whereas, in feed forward control system, the controller compensates before the disturbance affects the process. The efficiency of disturbance control depends on the ability to measure the disturbance. It estimates the effect of disturbance on the controlled variable, so that we can compensate for it.

For example, in a heat exchanger, the feedback control action depends on the sensed temperature. The input parameters to the plant are flow and temperature of the input fluid and the steam flow.

Any disturbance affecting the plant is sensed by the temperature sensor and then the control action is done by controlling the steam flow.

In feedforward control strategy the steam flow into the plant depends on the flow and temperature of the fluid. It is a kind of open loop control. The disturbance is anticipated prior to it affecting the plant. This control can minimize the transient error, with limited accuracy since it cannot cancel un-measurable disturbance.

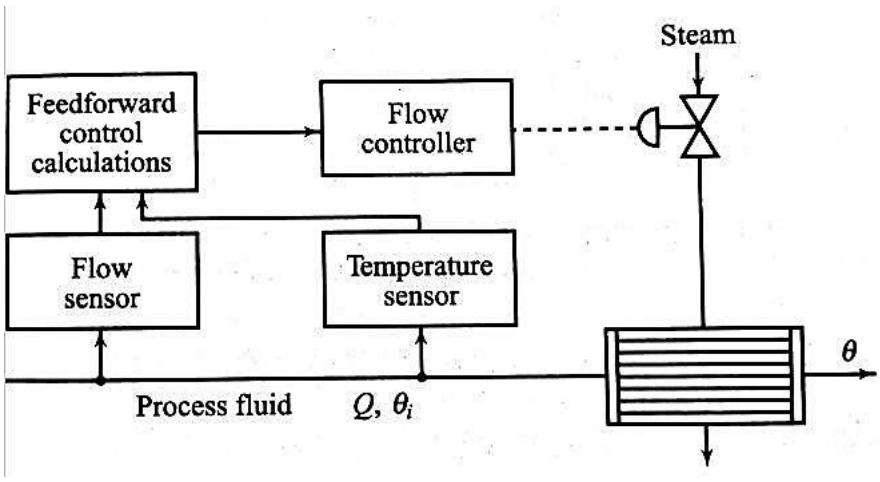

Fig: Feed forward control

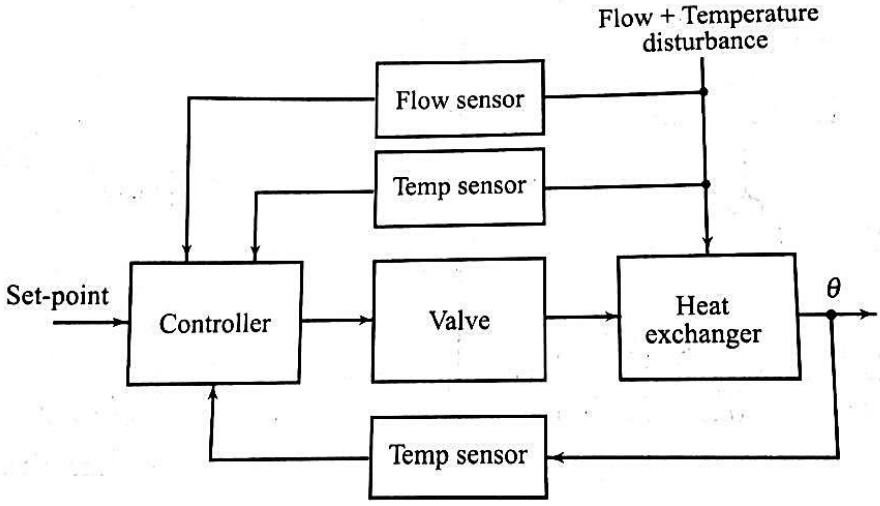

Fig: Feed forward control scheme

Another control scheme uses both Feed-forward and feedback control together, such that the system uses compensator and also provides the feedback control for unmeasurable disturbance.

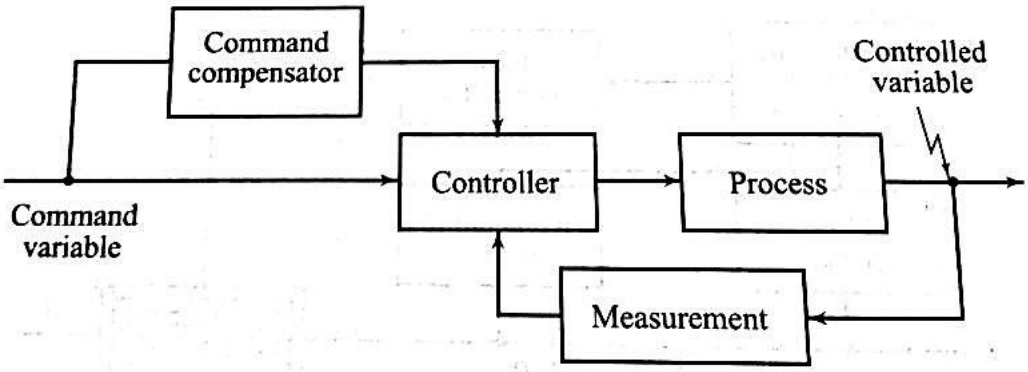

Fig: Combined Feed-forward and feedback control

MULTIVARIBLE CONTROL SCHEMES

Complex process and machines often have several variables (output) that we wish to control, and several manipulated input variables available to provide this control. Sometimes the control situation is simple; one input affects primarily one output and has only weak effect in the other outputs. In such situations, it is possible to ignore weak interactions (coupling) and design controllers under the assumption that one input affects only one output. Input-output paring to minimize the effects of interactions and application of SISO control schemes to obtain separate controllers for each input-output pair, results in an acceptable performance. This, in fact, amounts to considering the multivariable system as constituting of an appropriate number of separate SISO systems. Coupling effects are considered as disturbance to the separate control systems and may not cause significant degradation in their performance if the coupling is weak.

A multivariable system is said to have strong interaction (coupling) if one input affects more than one output appreciably. There are two approaches for the design of controllers for such system.

- Design a decoupling controller to cancel the interaction inherent in the system. Consider the resulting multivariable system as consisting of an appropriate number of SISO systems, and design a controller for each system.
- Design s single controller for the multivariable system, taking interacting into account.

UNIT II TIME RESPONSE ANALYSIS

Transient response-steady state response-Measures of performance of the standard first order and second order system- effect on an additional zero and an additional pole-steady error constant and system- type number-PID control-Analytical design for PD, PI,PID control systems

Time Response:

If the output of control system for an input varies with respect to time, then it is called the **time response** of the control system. The time response consists of two parts.

- Transient response
- Steady state response

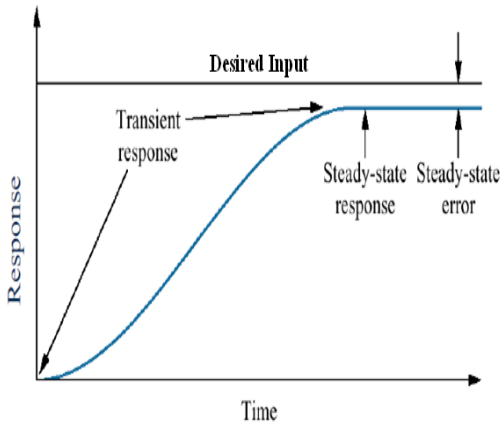

Mathematically, we can write the time response c(t) as

c(t)=ctr(t)+css(t)c(t)=ctr(t)+css(t)

Where,

- $c_{tr}(t)$ is the transient response
- $c_{ss}(t)$ is the steady state response

Transient Response

After applying input to the control system, output takes certain time to reach steady state. So, the output will be in transient state till it goes to a steady state. Therefore, the response of the control system during the transient state is known as **transient response**.

The transient response will be zero for large values of 't'. Ideally, this value of 't' is infinity and practically, it is five times constant.

Mathematically, we can write it as

limt→∞ctr(t)=0limt→∞ctr(t)=0

Steady state Response

The part of the time response that remains even after the transient response has zero value for large values of 't' is known as **steady state response**. This means, the transient response will be zero even during the steady state.

Standard Test Signals:

- In most cases, the input signals to a control system are not known prior to design of control system
- To analyse the performance of control system it is excited with standard test signals
- These inputs are chosen because they capture many of the possible variations that can occur in an arbitrary input signal
  - Step signal (Sudden change)
  - Ramp signal (Constant velocity)
  - Parabolic signal (Constant acceleration)
  - Impulse signal (Sudden shock)
  - Sinusoidal signal

step signal

A step signal, u(t) is defined as

r(t) =A; t≥0

= 0; t<0

A unit step signal, u(t) is defined as

u(t) =1; t≥0

= 0; t<0

$$L\{u(t)\} = \frac{1}{s}$$

Following figure shows unit step signal.

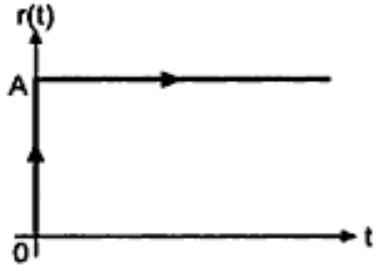

So, the unit step signal exists for all positive values of 't' including zero. And its value is one during this interval. The value of the unit step signal is zero for all negative values of 't'.

Ramp Signal:

A ramp signal, r(t) is defined as

r(t) =At; t≥0

= 0; t<0

A unit ramp signal, r(t) is defined as

r(t) =t; t≥0

= 0; t<0

$$L\{r(t)\} = \frac{1}{s^2}$$

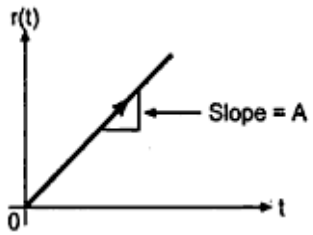

the unit ramp signal exists for all positive values of 't' including zero. And its value increases linearly with respect to 't' during this interval. The value of unit ramp signal is zero for all negative values of 't'.

Parabolic Signal

A parabolic signal, p(t) is defined as,

r(t) =$At^2/2$; t≥0

= 0 ; t<0

A unit parabolic signal, p(t) is defined as,

r(t) =$t^2/2$; t≥0

= 0; t<0

$$L\{r(t)\} = \frac{1}{s^3}$$

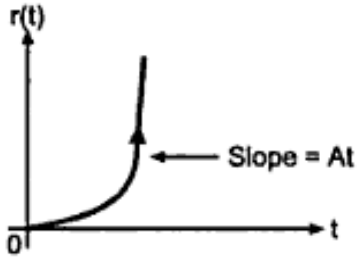

the unit parabolic signal exists for all the positive values of **'t'** including zero. And its value increases non-linearly with respect to 't' during this interval. The value of the unit parabolic signal is zero for all the negative values of 't'.

<u>Impulse Signal</u>

A unit impulse signal, δ(t) is defined as

r(t) =A; t=0

= 0; t≠0

A unit impulse signal, δ(t) is defined as

δ(t) = 1; t=0

= 0; t≠0

$$L\{\delta(t)\} = 1$$

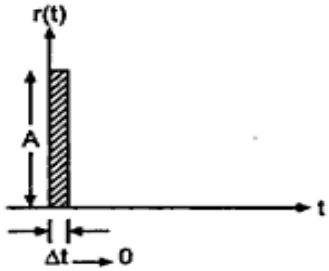

the unit impulse signal exists only at 't' is equal to zero. The area of this signal under small interval of time around 't' is equal to zero is one. The value of unit impulse signal is zero for all other values of 't'.

System Representation: A system can be represented in following way

1. Transfer Function in pole zero form $$T(s) = K\frac{C(s)}{R(s)} = K\frac{(s+z_1)(s+z_2)(s+z_3).....}{(s+p_1)(s+p_2)(s+p_3)}$$

Where z1,z2,z3, are zeros and p1,p2,p3 are poles

2. Transfer Function in time constant form $$T(s) = K\frac{C(s)}{R(s)} = K\frac{(1+\tau_{z1}s)(1+\tau_{z2}s)(1+\tau_{z3}s).....}{(1+\tau_{p1}s)(1+\tau_{p1}s)(1+\tau_{p1}s)}$$

Where τ_{z1}, τ_{z2} τ_{z3}, τ_{p1} τ_{p2}, τ_{p3} are time constants.

Order & Type of the system:

The order of the system is given by the maximum power of s in the denominator transfer functions.

The type number is specified for loop transfer function G(s)H(s). The number of poles lying at the origin decides the type number of the system.

Order 1	$\frac{1}{s+2}$	Type 0	$\frac{1}{s+2}$
Order 2	$\frac{s+1}{s^2+5s+10}$	Type 1	$\frac{1}{s(s-5)}$
Order 3	$\frac{1}{s^3+4s^2+s+4}$	Type 2	$\frac{1}{s^2(s+7)}$

Step Response of First Order System

Consider the following 1st order system

$$\frac{C(s)}{R(s)} = \frac{K}{1+\tau s}$$

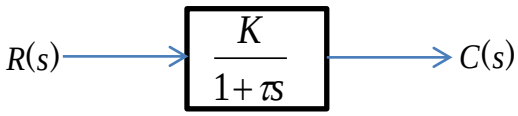

Where K-gain

τ - time constant (time require to reach 63.2% of final value

Substitute, R(s)=1/ s in the above equation

$$C(s) = \frac{K}{(1+\tau s)} R(s) = \frac{K}{s(1+\tau s)}$$

Do partial fractions of C(s).

$$C(s) = \frac{A}{s} + \frac{B}{\tau s + 1}$$

Cross multiply terms in right side of equation. On both the sides, the denominator term is the same. So, they will get cancelled by each other. Hence, equate the numerator terms.

k=A(s τ +1)+Bs

By equating the constant terms on both the sides, you will get A = k

Substitute, A = 1 and equate the coefficient of the **s** terms on both the sides.

0=AT+B⇒B=−k τ

Substitute, A = k and B = −T in partial fraction expansion of C(s)

$$C(s) = \frac{K}{s} - \frac{K\tau}{\tau s + 1} \qquad C(s) = K\left(\frac{1}{s} - \frac{\tau}{\tau s + 1}\right)$$

Taking Inverse Laplace of above equation

$$c(t) = K\left(1 - e^{-t/\tau}\right)$$

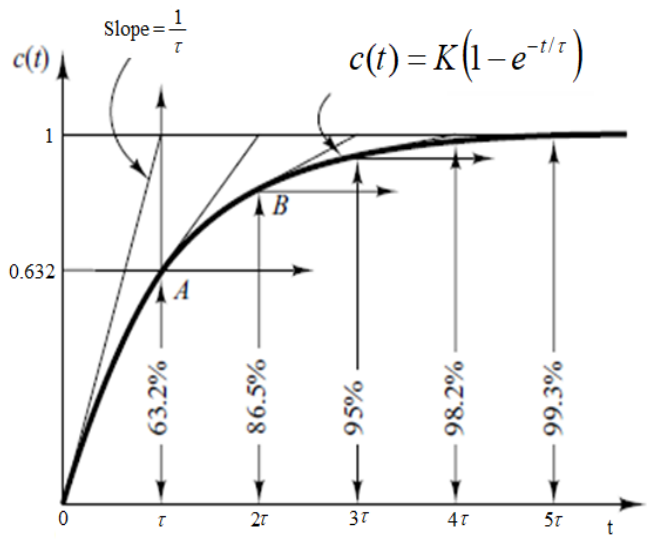

Impulse Response of First Order System

Consider the following 1st order system

$$\frac{C(s)}{R(s)} = \frac{K}{1+\tau s}$$

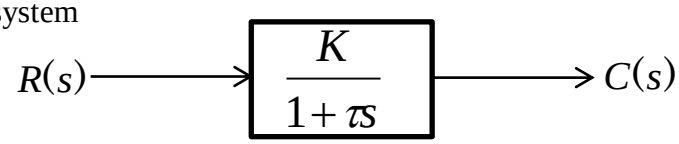

Where K-gain

τ - time constant (time require to reach 63.2% of final value

Substitute, $R(s) = \delta(s) = 1$ in the above equation

$$C(s) = \frac{K}{(1+\tau s)} R(s) = \frac{K}{(1+\tau s)} \qquad C(s) = \frac{K}{1+\tau s}$$

$$C(s) = \frac{K/\tau}{s+1/\tau}$$

Taking Laplace Transform

$$c(t) = \frac{K}{\tau} e^{-t/\tau}$$

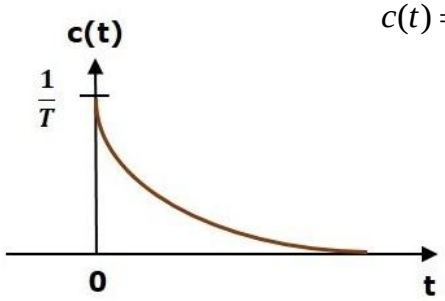

Relation Between Step and impulse response

The step response of the first order system is

$$c(t) = K\left(1 - e^{-t/\tau}\right) = K - Ke^{-t/\tau}$$

Differentiating c(t) with respect to t yields

$$\frac{dc(t)}{dt} = \frac{d}{dt}\left(K - Ke^{-t/\tau}\right) \qquad \frac{dc(t)}{dt} = \frac{K}{\tau} e^{-t/\tau}$$

Second Order System

The general equation for the transfer function of a second order control system is given as

$$\frac{C(s)}{R(s)} = \frac{\omega_n^2}{s^2 + 2\zeta\omega_n s + \omega_n^2}$$

The power of 's' is two in the denominator term. Hence, the above transfer function is of the second order and the system is said to be the **second order system**.

Here, an open loop transfer function, $\frac{\omega_n^2}{s(s+2\zeta\omega_n s)}$ is connected with a unity negative feedback.

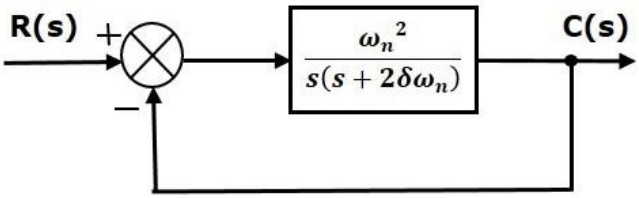

$$\frac{C(s)}{R(s)} = \frac{\omega_n^2}{s^2 + 2\zeta\omega_n s + \omega_n^2}$$

ω_n un-damped natural frequency of the second order system, which is the angular frequency at which system oscillate in the absence of damping.

ζ damping ratio, a dimensionless quantity describing the decay of oscillations during transient response.

Damping is an effect created in an oscillatory system that reduces, restricts or prevents the oscillations in the system.

System can be classified as follows depending on damping effect

Overdamped system: $\zeta > 1$. Transients in the system exponentially decays to steady state without any oscillations

Critically damped system($\zeta = 1$). Transients in the system exponentially decays to steady state without any oscillations in shortest possible time

Underdamped system $0 < \zeta < 1$.: System transient oscillate with the amplitude of oscillation gradually decreasing to zero

Undamped system: ($\zeta = 0$)System keeps on oscillating at its natural frequency without any decay in amplitude

The characteristic equation is $s^2+2\zeta\omega ns+\omega n^2=0$

The roots of characteristic equation are

S1,s2= $(-\zeta\omega_n) \pm \omega_n\sqrt{\zeta^2-1}$

the two roots are imaginary when $\zeta = 0$.

The two roots are real and equal when $\zeta = 1$.

The two roots are real but not equal when $\zeta > 1$.

The two roots are complex conjugate when $0 < \zeta < 1$.

Step Response of second order system

Case1 : undamped system $\zeta = 0$.

Second order system $\dfrac{C(s)}{R(s)} = \dfrac{\omega_n^2}{s^2+2\zeta\omega_n s+\omega_n^2}$

Substitute, $\zeta = 0$. in the transfer function.

$$\frac{C(s)}{R(s)} = \frac{\omega_n^2}{(s^2+\omega_n^2)}$$

For Unit step input $R(s) = \dfrac{1}{s}$

$$C(s) = \frac{\omega_n^2}{(s^2+\omega_n^2)}R(s) \qquad C(s) = \frac{\omega_n^2}{s(s^2+\omega_n^2)}$$

Take partial fraction and Apply inverse Laplace transform on both the sides

$$c(t) = 1-\cos\omega_n t$$

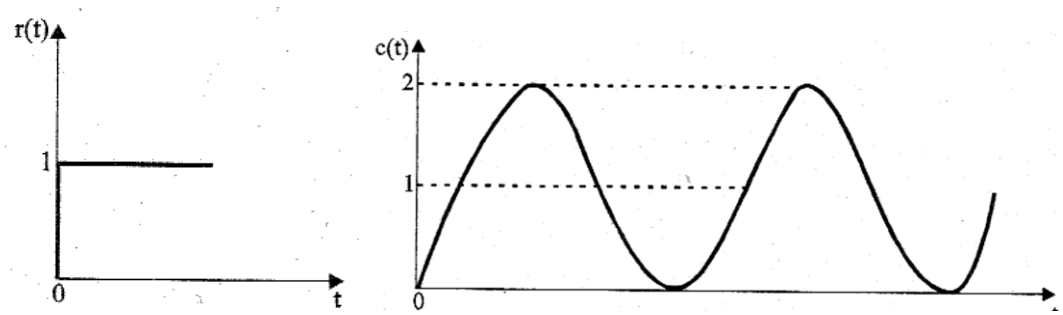

Case2 : under damped system $0 < \zeta < 1$.

$$\frac{C(s)}{R(s)} = \frac{\omega_n^2}{s^2+2\zeta\omega_n s+\omega_n^2}$$

$$C(s) = \frac{\omega_n^2}{s^2+2\zeta\omega_n s+\omega_n^2}R(s)$$

For Unit step input $R(s) = \dfrac{1}{s}$

$$C(s) = \frac{\omega_n^2}{s(s^2+2\zeta\omega_n s+\omega_n^2)}$$

The partial fraction expansion of above equation is given as

$$C(s)=\frac{A}{s}-\frac{Bs+C}{s^2+2\zeta\omega_n s+\omega_n^2}$$

Cross multiply and compare the coefficients on both sides to fing A,B,C

$$C(s)=\frac{1}{s}-\frac{s+2\zeta\omega_n}{s^2+2\zeta\omega_n s+\omega_n^2}$$

Add and subtract $\zeta^2\omega_n^2$ to denominator

$$C(s)=\frac{1}{s}-\frac{s+2\zeta\omega_n}{s^2+2\zeta\omega_n s+\zeta^2\omega_n^2+\omega_n^2-\zeta^2\omega_n^2}$$

$$C(s)=\frac{1}{s}-\frac{s+2\zeta\omega_n}{(s+\zeta\omega_n)^2+\omega_n^2(1-\zeta^2)}$$

Above equation can be written as

$$C(s)=\frac{1}{s}-\frac{s+2\zeta\omega_n}{(s+\zeta\omega_n)^2+\omega_d^2}$$

Where $\omega_d=\omega_n\sqrt{1-\zeta^2}$, is the frequency of transient oscillations and is called damped natural frequency.

The inverse Laplace transform of above equation can be obtained easily if C(s) is written in the following form:

$$C(s)=\frac{1}{s}-\frac{s+\zeta\omega_n}{(s+\zeta\omega_n)^2+\omega_d^2}-\frac{\zeta\omega_n}{(s+\zeta\omega_n)^2+\omega_d^2}$$

$$C(s)=\frac{1}{s}-\frac{s+\zeta\omega_n}{(s+\zeta\omega_n)^2+\omega_d^2}-\frac{\frac{\zeta}{\sqrt{1-\zeta^2}}\omega_n\sqrt{1-\zeta^2}}{(s+\zeta\omega_n)^2+\omega_d^2}$$

$$C(s)=\frac{1}{s}-\frac{s+\zeta\omega_n}{(s+\zeta\omega_n)^2+\omega_d^2}-\frac{\zeta}{\sqrt{1-\zeta^2}}\frac{\omega_d}{(s+\zeta\omega_n)^2+\omega_d^2}$$

$$c(t)=1-e^{-\zeta\omega_n t}\cos\omega_d t-\frac{\zeta}{\sqrt{1-\zeta^2}}e^{-\zeta\omega_n t}\sin\omega_d t$$

$$c(t)=1-e^{-\zeta\omega_n t}\cos\omega_d t-\frac{\zeta}{\sqrt{1-\zeta^2}}e^{-\zeta\omega_n t}\sin\omega_d t$$

$$c(t)=1-e^{-\zeta\omega_n t}\left[\cos\omega_d t+\frac{\zeta}{\sqrt{1-\zeta^2}}\sin\omega_d t\right]$$

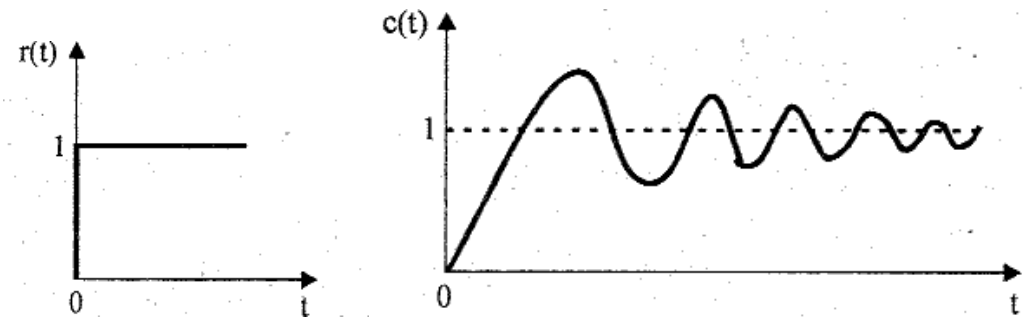

Case 3: Critically damped system $\zeta = 1$

$$\frac{C(s)}{R(s)} = \frac{\omega_n^2}{s^2 + 2\zeta\omega_n s + \omega_n^2}$$

$$C(s) = \frac{\omega_n^2}{(s+\omega_n)^2} R(s)$$

For Unit step input $R(s) = \frac{1}{s}$

$$C(s) = \frac{\omega_n^2}{s(s+\omega_n)^2}$$

The partial fraction expansion of above equation is given as

$$C(s) = \frac{A}{s} - \frac{B}{(s+\omega_n)} - \frac{C}{(s+\omega_n)^2}$$

Find constants A, B,C

$$C(s) = \frac{1}{s} - \frac{1}{(s+\omega_n)} - \frac{\omega_n}{(s+\omega_n)^2}$$

Take inverse Laplace transform

$$c(t) = 1 - e^{-\omega_n t} - \omega_n t e^{-\omega_n t}$$

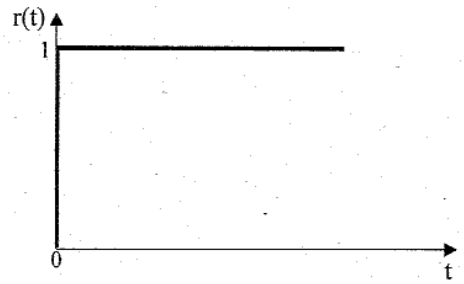

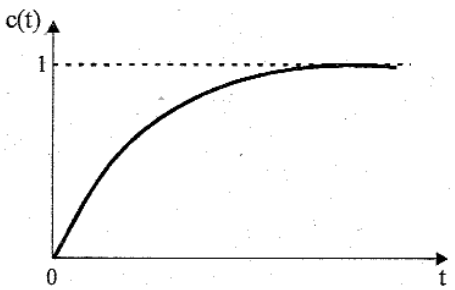

Case 4: Over damped system $\zeta > 1$

$$\frac{C(s)}{R(s)} = \frac{\omega_n^2}{s^2 + 2\zeta\omega_n s + \omega_n^2}$$

$$C(s) = \frac{\omega_n^2}{s^2 + 2\zeta\omega_n s + \omega_n^2} R(s)$$

Roots S1,s2= $(-\zeta\omega_n) \pm \omega_n\sqrt{\zeta^2 - 1}$

For Unit step input $R(s) = \frac{1}{s}$

$$C(s) = \frac{\omega_n^2}{s(s+s_1)(s+s_2)}$$

The partial fraction expansion of above equation is given as

$$C(s) = \frac{\omega_n^2}{s(s+s_1)(s+s_2)} = \frac{A}{s} + \frac{B}{s+s_1} + \frac{C}{s+s_2}$$

Find A,B,C values and substitute in the equation

$$C(s)=\frac{1}{s}-\left(\frac{\omega_n}{2\sqrt{\zeta^2-1}}\frac{1}{\left(\zeta\omega_n-\omega_n\sqrt{\zeta^2-1}\right)}\frac{1}{\left(s+\zeta\omega_n-\omega_n\sqrt{\zeta^2-1}\right)}\right)+$$

$$\left(\frac{\omega_n}{2\sqrt{\zeta^2-1}}\frac{1}{\left(\zeta\omega_n+\omega_n\sqrt{\zeta^2-1}\right)}\frac{1}{\left(s+\zeta\omega_n+\omega_n\sqrt{\zeta^2-1}\right)}\right)$$

Take inverse lapalce transform

$$c(t)=\frac{1}{s}-\left(\frac{\omega_n}{2\sqrt{\zeta^2-1}}\frac{1}{\left(\zeta\omega_n-\omega_n\sqrt{\zeta^2-1}\right)}e^{-\left(\zeta\omega_n-\omega_n\sqrt{\zeta^2-1}\right)t}\right)+$$

$$\left(\frac{\omega_n}{2\sqrt{\zeta^2-1}}\frac{1}{\left(\zeta\omega_n+\omega_n\sqrt{\zeta^2-1}\right)}e^{-\left(\zeta\omega_n+\omega_n\sqrt{\zeta^2-1}\right)t}\right)$$

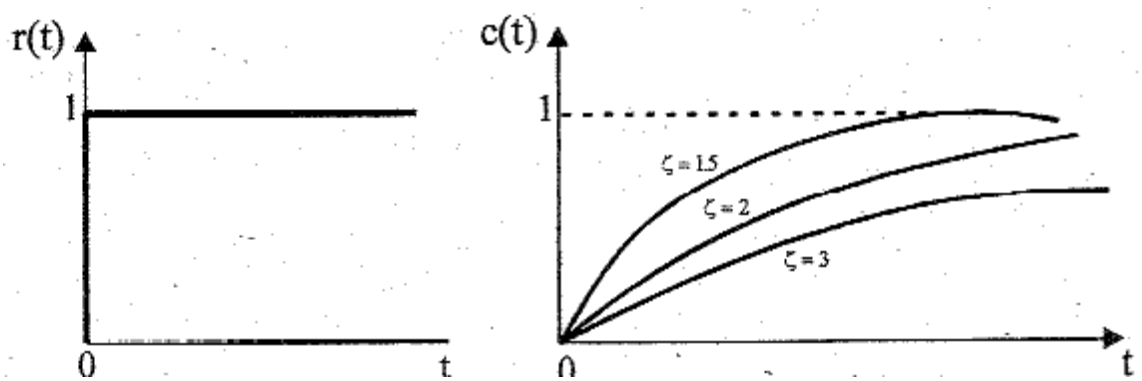

(Time domain) Transient Response Specifications:

The step response of the second order system for the underdamped case is shown in the following figure

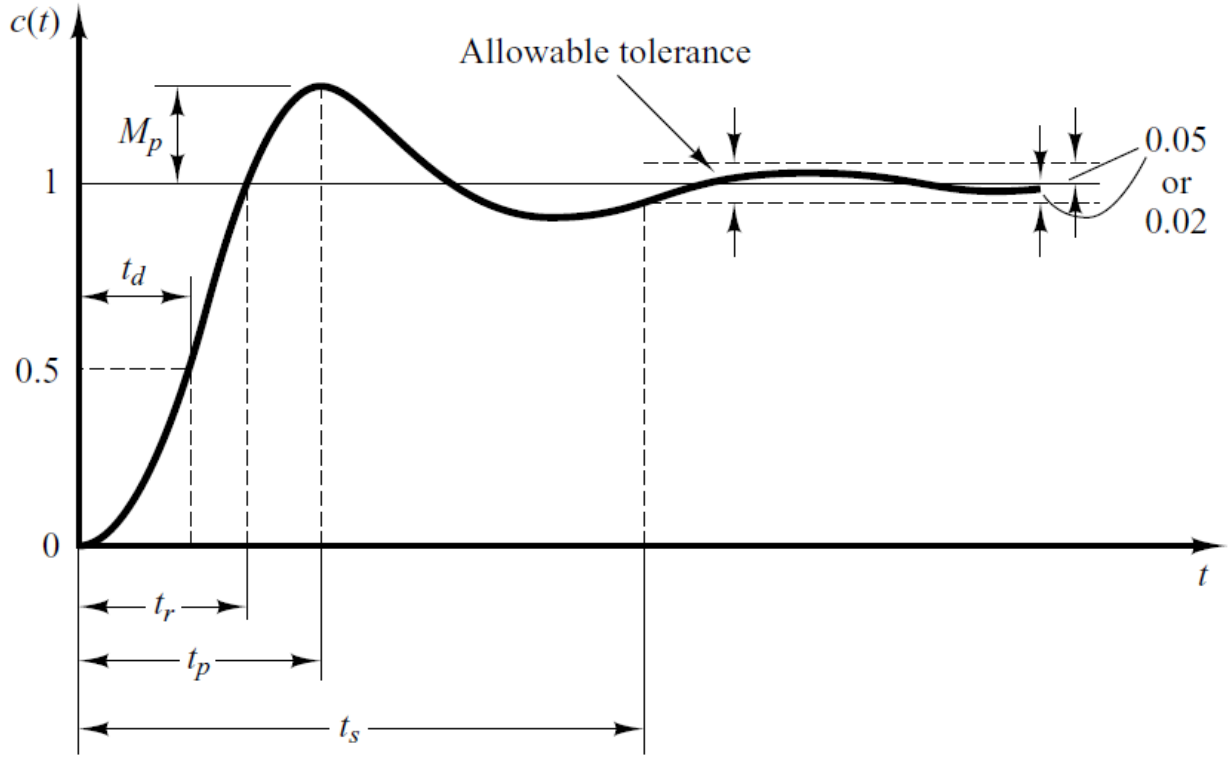

Important timing characteristics: delay time, rise time, peak time, maximum overshoot, and settling time.

Delay Time: (t_d) The delay (t_d) time is the time required for the response to reach 50% or half the final value the very first time.

$$t_d = \frac{1+0.7\zeta}{\omega_n}$$

Rise Time (t_r) The rise time is the time required for the response to rise from 10% to 90%, 5% to 95%, or 0% to 100% of its final value. For underdamped second order systems, the 0% to 100% rise time is normally used. For overdamped systems, the 10% to 90% rise time is commonly used.For critically damped systems, the 5% to 95% is used.

$$t_r = \frac{\pi - \tan^{-1}\left(\frac{\sqrt{1-\zeta^2}}{\zeta}\right)}{\omega_n\sqrt{1-\zeta^2}}$$

Peak Time (t_p): The peak time is the time required for the response to reach the first peak of the overshoot.

$$t_p = \frac{\pi}{\omega_n\sqrt{1-\zeta^2}}$$

Maximum Overshoot/ peak overshoot: The maximum overshoot is the maximum peak value of the response curve measured from unity. If the final steady-state value of the response differs from unity, then it is common to use the maximum percent overshoot. It is defined by

Maximum Overshoot/ peak overshoot $\%M_p = \frac{C(t_p)-C(\alpha)}{C(\alpha)} x100$

The amount of the maximum (percent) overshoot directly indicates the relative stability of the system.

$$\%M_p = e^{-\frac{\zeta\pi}{\sqrt{1-\zeta^2}}} \times 100$$

Settling Time (t_s): The settling time is the time required for the response curve to reach and stay within a range about the final value of size specified by absolute percentage of the final value (usually 2% or 5%).

$$t_s = \frac{4}{\zeta\omega_n} \quad for\ 2\%\ criterion$$

$$t_s = \frac{3}{\zeta\omega_n} \quad for\ 5\%\ criterion$$

Effect of addition of poles

consider system $G(s) = \frac{1}{(s+1)}$

Add a pole , system become $G(s) = \frac{10}{(s+0.5)(s+1)}$

i) Root locus shift towards right half of the s-plane

ii) Gain margin increases, system stability relatively decreases

iii) system becomes more oscillatory in nature

iv) range of operating values of k, for stability of the system decreases

v) settling time increases

Effect of addition of zeros

consider system $G(s) = \dfrac{25}{s^2 + 4s + 25}$

Adding a Zero, system become $G(s) = \dfrac{25(s+1)}{s^2 + 4s + 25}$

i) Root locus shift towards left half of the s-plane

ii) system stability relatively increases

iii) system becomes less oscillatory in nature

iv) Range of operating values of K for stability of the system increases

Steady State Error:

If the output of a control system at steady state does not exactly match with the input, the system is said to have steady state error.Any physical control system inherently suffers steady-state error in response to certain types of inputs.

A system may have no steady-state error to a step input, but the same system may exhibit nonzero steady-state error to a ramp input.The magnitudes of the steady-state errors due to these individual inputs are indicative of the goodness of the system.

Steady state error depends upon both input and type of the system. As the type number is increased, accuracy is improved. However, increasing the type number aggravates the stability problem. A compromise between steady-state accuracy and relative stability is always necessary.

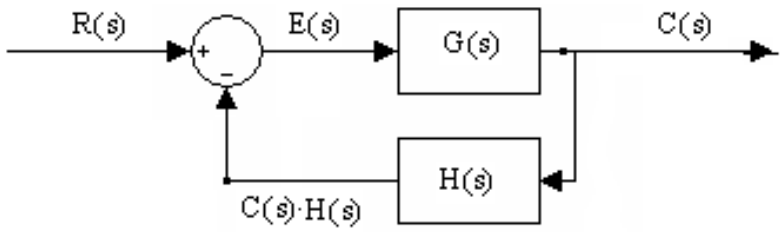

E(s) = Error Signal

E(s) = R(s) - C(s) .H(s)

Output signal C(s) = E(s).G(s)

Substituting C(s) in E(s)

E(s) = R(s) - E(s).G(s) H(s)

$$E(s) = \frac{R(s)}{1 + G(s)H(s)}$$

Let e(t) error signal in time domain

$$e(t) = L^{-1}[E(s)] = L^{-1}\left[\frac{R(s)}{1+G(s)H(s)}\right]$$

Let e_{ss}= steady state error

$$e_{ss} = \underset{t\to\infty}{Lt}\, e(t)$$

The final value theorem states that

$$\underset{t\to\infty}{Lt}\, f(t) = \underset{s\to 0}{Lt}\, sF(s)$$

Steady state error

$$e_{ss} = \underset{t\to\infty}{Lt}\, e(t) = \underset{s\to 0}{Lt}\, sE(s) = \underset{s\to 0}{Lt}\frac{sR(s)}{1+G(s)H(s)}$$

Static Error Constant : The response that remain after the transient response has died out is called steady state response. The steady sate response is important to find the accuracy of the output. The difference between steady state response and desired response gives the steady state error.The control system has following steady state errors for change in positions, velocity and acceleration**.**

- Type-0 system will have constant steady state error when input is step signal

  Positional Error Constant $K_p = \underset{s\to 0}{Lt}\, G(s)H(s)$

- Type-1 system will have constant steady state error when input is ramp signal

  Velocity Error Constant $K_v = \underset{s\to 0}{Lt}\, sG(s)H(s)$

- Type-2 system will have constant steady state error when input is parabolic signal

  Acceleration Error Constant $K_a = \underset{s\to 0}{Lt}\, s^2G(s)H(s)$

Where $\mathrm{G(s)\,H(s)} = \mathrm{K}\frac{\mathrm{C(s)}}{\mathrm{R(s)}} = K\frac{(s+z_1)(s+z_2)(s+z_3).....}{s^N(s+p_1)(s+p_2)(s+p_3)}$

These constants are called **static error coefficient.** They have the ability to minimize the steady error.

Steady state error for unit Step Input:

Steady state error $e_{ss} = \underset{s\to 0}{Lt}\frac{sR(s)}{1+G(s)H(s)}$ **unit Step Input** $R(s) = \frac{1}{s}$

$$e_{ss} = \underset{s\to 0}{Lt}\frac{sR(s)}{1+G(s)H(s)} = \underset{s\to 0}{Lt}\frac{s(\frac{1}{s})}{1+G(s)H(s)}$$

$$e_{ss} = \underset{s\to 0}{Lt}\frac{1}{1+G(s)H(s)}$$

$$e_{ss} = \frac{1}{1+\underset{s\to 0}{Lt}\, G(s)H(s)}$$

$e_{ss} = \frac{1}{1+K_p}$ where **Positional Error Constant** $K_p = \underset{s\to 0}{Lt}\, G(s)H(s)$

Type-0 system:

$$K_p = \underset{s\to 0}{Lt}\, G(s)H(s) \qquad G(s)H(s) = K\frac{(s+z_1)(s+z_2).....}{(s+p_1)(s+p_2).....}$$

$$K_p = \underset{s\to 0}{Lt}\frac{(s+z_1)(s+z_2).....}{(s+p_1)(s+p_2).....} = \frac{z_1 z_2 z_3}{p_1 p_2 p_3} = const$$

$$e_{ss} = \frac{1}{1+K_p} = const$$

Type-1 system

$$K_p = \underset{s\to 0}{Lt}\, G(s)H(s) \qquad G(s)H(s) = K\frac{(s+z_1)(s+z_2).....}{s(s+p_1)(s+p_2).....}$$

$$K_p = \underset{s\to 0}{Lt}\frac{(s+z_1)(s+z_2).....}{s(s+p_1)(s+p_2).....} = \infty$$

$$e_{ss} = \frac{1}{1+K_p} = 0$$

Steady state error for Ramp Input

Steady state error $e_{ss} = \underset{s\to 0}{Lt}\frac{sR(s)}{1+G(s)H(s)}$ unit Ramp Input $R(s) = \frac{1}{s^2}$

$$e_{ss} = \underset{s\to 0}{Lt}\frac{\frac{1}{s}}{1+G(s)H(s)} = \underset{s\to 0}{Lt}\frac{1}{s+sG(s)H(s)}$$

$$e_{ss} = \frac{1}{\underset{s\to 0}{Lt}\, sG(s)H(s)}$$ **Velocity Error Constant** $K_v = \underset{s\to 0}{Lt}\, sG(s)H(s)$

$$e_{ss} = \frac{1}{K_v}$$

Type-0 system

$$K_v = \underset{s\to 0}{Lt}\, sG(s)H(s) \qquad G(s)H(s) = K\frac{(s+z_1)(s+z_2).....}{(s+p_1)(s+p_2).....}$$

$$K_v = \underset{s\to 0}{Lt}\, sK\frac{(s+z_1)(s+z_2).....}{(s+p_1)(s+p_2).....} = 0 \qquad e_{ss} = \frac{1}{K_v} = \frac{1}{0} = \infty$$

Type-1 system

$$K_v = \underset{s\to 0}{Lt}\, sG(s)H(s) \qquad G(s)H(s) = K\frac{(s+z_1)(s+z_2).....}{s(s+p_1)(s+p_2).....}$$

$$K_v = \underset{s\to 0}{Lt}\, sK\frac{(s+z_1)(s+z_2).....}{s(s+p_1)(s+p_2).....} = \frac{z_1.z_2.....}{p_1.p_2.....} = const$$

$$e_{ss} = \frac{1}{K_v} = const$$

Type-2 system

$$K_v = \underset{s\to 0}{Lt}\, sG(s)H(s) \qquad G(s)H(s) = K\frac{(s+z_1)(s+z_2).....}{s^2(s+p_1)(s+p_2).....}$$

$$K_p = \underset{s\to 0}{Lt}\, sK\frac{(s+z_1)(s+z_2).....}{s^2(s+p_1)(s+p_2).....} = \infty$$

$$e_{ss} = \frac{1}{K_v} = 0$$

Steady state error for Parabolic Input

Steady state error $e_{ss} = \underset{s\to 0}{Lt} \dfrac{sR(s)}{1+G(s)H(s)}$ Parabolic Input $R(s) = \dfrac{1}{s^3}$

$$e_{ss} = \underset{s\to 0}{Lt} \frac{1}{s^2 + s^2 G(s)H(s)}$$

$$e_{ss} = \frac{1}{\underset{s\to 0}{Lt}\, s^2 G(s)H(s)}$$

$$e_{ss} = \frac{1}{K_a}$$ Where **Acceleration Error Constant** $K_a = \underset{s\to 0}{Lt}\, s^2 G(s)H(s)$

Type-0 system

$$K_a = \underset{s\to 0}{Lt}\, s^2 G(s)H(s) \qquad K_a = \underset{s\to 0}{Lt}\, s^2 K \frac{(s+z_1)(s+z_2).....}{(s+p_1)(s+p_2).....} = 0$$

$$e_{ss} = \frac{1}{K_a} = \frac{1}{0} = \infty$$

Type-1 system

$$K_a = \underset{s\to 0}{Lt}\, s^2 K \frac{(s+z_1)(s+z_2).....}{s(s+p_1)(s+p_2).....} = 0$$

$$e_{ss} = \frac{1}{K_a} \qquad e_{ss} = \frac{1}{K_a} = \frac{1}{0} = \infty$$

Type-2 system

$$K_a = \underset{s\to 0}{Lt}\, s^2 K \frac{(s+z_1)(s+z_2).....}{s^2(s+p_1)(s+p_2).....} = const \qquad e_{ss} = \frac{1}{K_a} = const$$

Type-3system

$$K_a = \underset{s\to 0}{Lt}\, s^2 K \frac{(s+z_1)(s+z_2).....}{s^3(s+p_1)(s+p_2).....} = \infty \qquad e_{ss} = \frac{1}{K_a} = 0$$

Type	**Steady State Error**		
	Unit Step	Unit Ramp	Unit Parabolic
0	$\dfrac{1}{1+K_p}$	∞	∞
1	0	$\dfrac{1}{K_v}$	∞
2	0	0	$\dfrac{1}{K_a}$
3	0	0	0

The higher the constants, the smaller the steady-state error. As the steady state error is inversely proportional to static error constant. Increasing the gain increases the static error constant. Thus in general increases the system gain decreases the steady state error.

Automatic control system

Automatic control is the application of control theory for regulation of processes without direct human intervention. In the simplest type of an automatic control loop, a controller compares a measured value of a process with a desired set value, and processes the resulting error signal to change some input to the process, in such a way that the process stays at its set point despite disturbances. This closed-loop control is an application of negative feedback to a system.

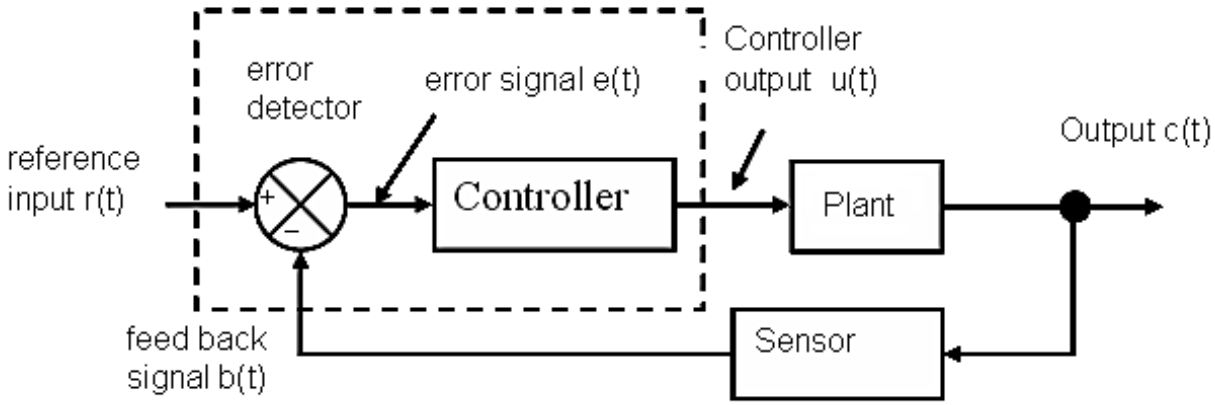

A controller is device introduced in the system to modify the error signal and to produce a control signal. The manner in which the controller produces the control signal is called control action. The combined unit of error detector and controller is called automatic controller. Based on the control action controller can be classified as

- **Proportional Controller**
- **Proprtional Integral Controller**
- **Proportional Derivative Controller**
- **Proportional Integral Derivative Controller**

Proportional Controller:

- It produces an output signal u(t) which is proportional to error signal e(t)
- It amplifies the error signal and increase the loop gain of the system
- Steady state tracking accuracy
- Disturbance signal rejection
- Relative stability
- Its transfer function is represented by K_p

  In P controller U(t) α e(t)

  $u(t) = K_p e(t)$ where K_p - Proportional gain

  Take laplace transform $U(s) = K_p E(s)$

  The transfer function of P controller $\frac{U(s)}{E(s)} = K_p$

Block diagram

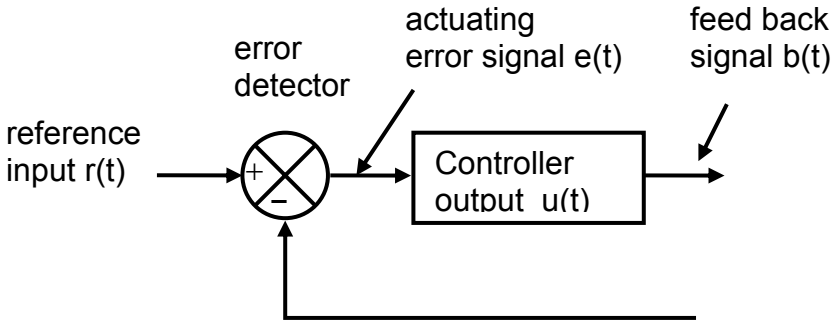

Electronic p controller:

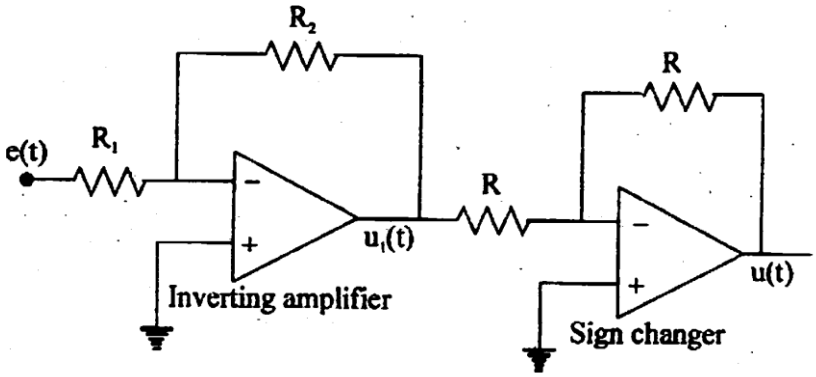

Proportional gain $K_p = \frac{R_2}{R_1}$

Drawback

- Produces constant steady state error (offset)
- Decreases the sensitivity of the system

Integral controller:

- It produces an output signal u(t) which is proportional to integral of the input error signal e(t)

$$u(t) \alpha \int_0^t e(t)dt$$

$$u(t) = \frac{K_p}{T_i}\int_0^t e(t)dt = K_i \int_0^t e(t)dt$$

Where $K_i = \frac{K_p}{T_i}$ integral gain. T_i-integral time

Take laplace transform $U(s) = K_i \frac{E(s)}{s}$

The transfer function of I controller $\frac{U(s)}{E(s)} = \left(\frac{K_i}{s}\right)$

Block diagram

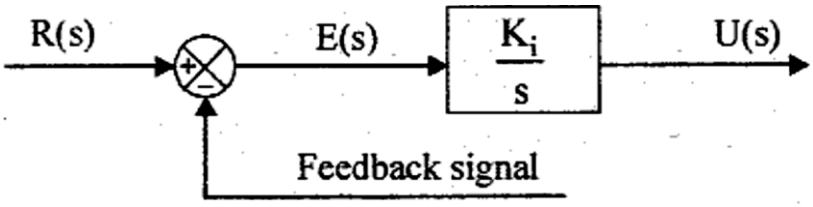

Electronic I controller

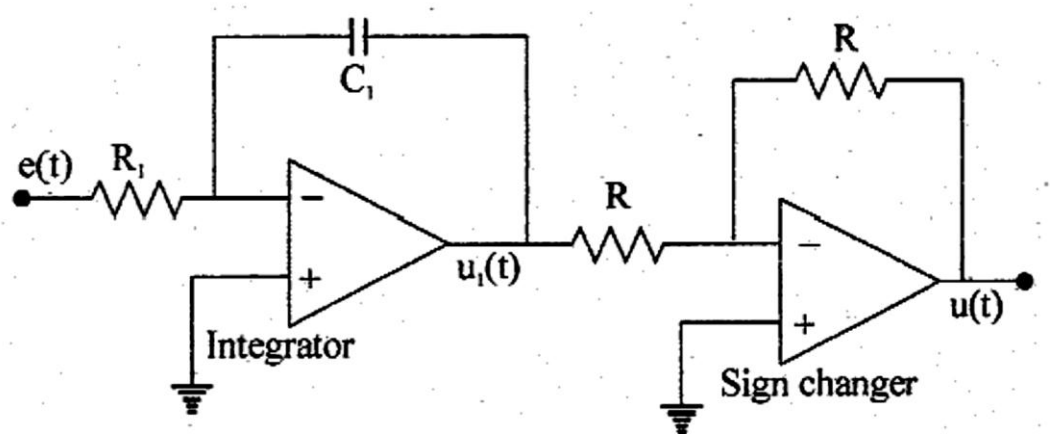

Integral gain $K_i = \frac{1}{R_1 C_1}$

Advantages

Its eliminate the steady state error

Proprtional Integral Controller

Proprtional Integral Controller (PI) produces output signal consists of two terms one propotional to error signal and other propotional to integral of error signal

$$u(t) = K_p e(t) + \frac{K_p}{T_i}\int_0^t e(t)dt$$

Take lapalce transform

$$U(s) = K_p E(s) + \frac{K_p}{T_i}\frac{E(s)}{s}$$

The transfer function of PI controller

$$\frac{U(s)}{E(s)} = K_p\left(1 + \frac{1}{T_i s}\right) \quad = K_p\left(\frac{T_i s + 1}{T_i s}\right)$$

Where $K_i = \frac{K_p}{T_i}$ integral gain. T_i -integral time. K_p - **Proprtional gain**

Inverse of (T_i)integral time is called **reset rate**

Block diagram

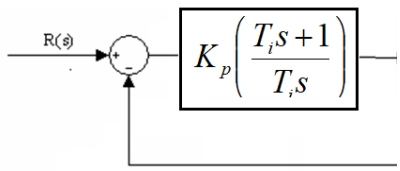

Electronic PI controller

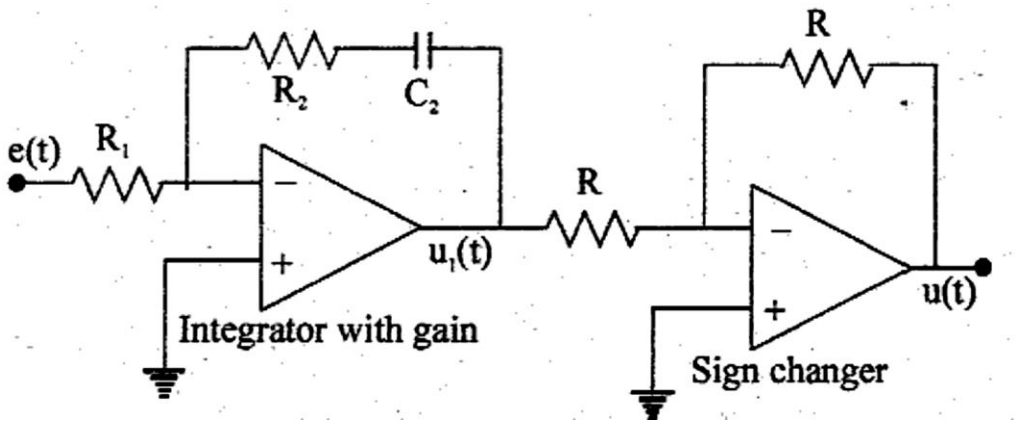

Proportional gain $K_p = \dfrac{R_2}{R_1}$

integral time. $T_i = R_2 C_2$

Effect of pI controller: consider closed loop system with PI controller

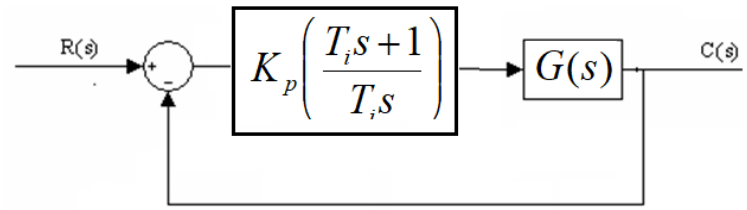

$$G(s) = \frac{\omega_n^2 s(s+2\varsigma\omega_n)}{}$$

$$\frac{C(s)}{R(s)} = \frac{G(s)}{1+G(s)} = \frac{K_p\left(\dfrac{1+T_i s}{T_i s}\right)\dfrac{\omega_n^2}{s(s+2\varsigma\omega_n)}}{1+K_p\left(\dfrac{1+T_i s}{T_i s}\right)\dfrac{\omega_n^2}{s(s+2\varsigma\omega_n)}}$$

$$= \frac{K_p\omega_n^2(1+T_i s)}{s^2 T_i(s+2\varsigma\omega_n)+K_p\omega_n^2(1+T_i s)}$$

$$= \frac{K_p\omega_n^2(1+T_i s)}{s^3 T_i + s^2 T_i 2\varsigma\omega_n + K_p\omega_n^2 T_i s + K_p\omega_n^2}$$

$$= \frac{K_p\omega_n^2(1+T_i s)}{s^3 T_i + s^2 T_i 2\varsigma\omega_n + K_p\omega_n^2 T_i s + K_p\omega_n^2}$$

$$= \frac{(K_p/T_i)\omega_n^2(1+T_i s)}{s^3 + s^2 2\varsigma\omega_n + K_p\omega_n^2 s + \dfrac{K_p}{T_i}\omega_n^2} \qquad = \frac{K_p\omega_n^2(1+T_i s)}{s^2 T_i(s+2\varsigma\omega_n)+K_p\omega_n^2(1+T_i s)}$$

$$= \frac{K_p\omega_n^2(1+T_i s)}{s^3 T_i + s^2 T_i 2\varsigma\omega_n + K_p\omega_n^2 T_i s + K_p\omega_n^2}$$

Inference:

- There is a increase in order by one and introduces zero in the system
- The increase in order of the system results in less stable
- The type number of the open loop system increases by one ,this will reduces the steady state error
- Increase in zero increases the peak overshoot

Propotional Plus derivative (PD) Controller:

Propotional Plus derivative (PD) Controller produces output signal consists of two terms one propotional to error signal and other propotional to derivative of error signal

$$u(t) = K_p e(t) + K_p T_d \frac{de(t)}{dt}$$

Take lapalce transform

$$U(s) = K_p E(s) + K_p T_d \, sE(s)$$

The transfer function of PD controller

$$\frac{U(s)}{E(s)} = K_p(1 + T_d s)$$

Where T_d -Derivative time. K_p - Proprtional gain

block diagram

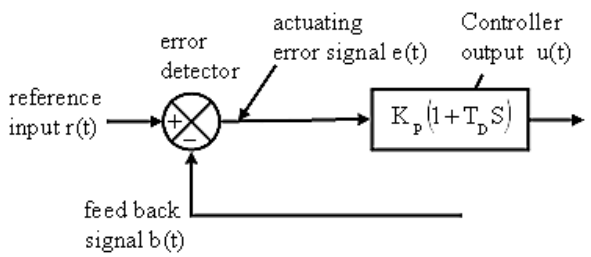

Electronic PD controller

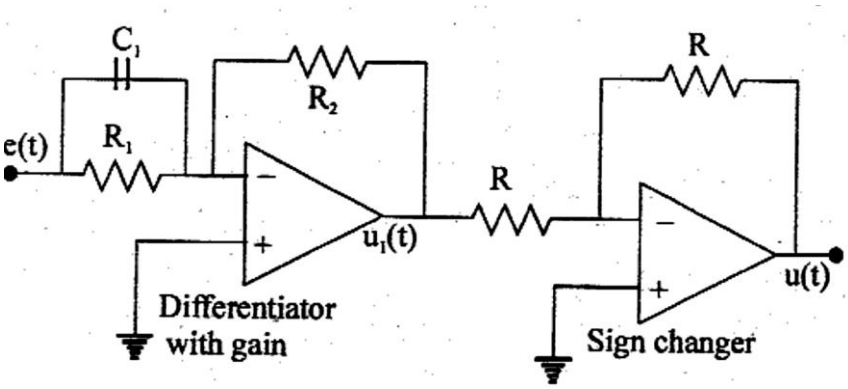

Proportional gain $K_p = \frac{R_2}{R_1}$

Derivative time. $T_d = R_1 C_1$

Effect of PD controller: consider closed loop system with PD controller

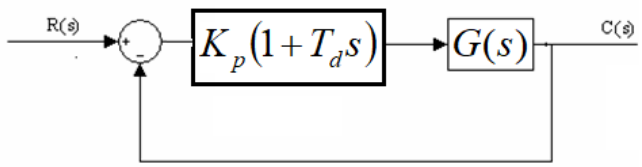

Let open loop TF is given by

$$G(s) = \frac{\omega_n^2}{s(s + 2\varsigma\omega_n)}$$

$$\frac{C(s)}{R(s)} = \frac{G(s)}{1 + G(s)} = \frac{K_p(1 + T_d s)\dfrac{\omega_n^2}{s(s + 2\varsigma\omega_n)}}{1 + K_p(1 + T_d s)\dfrac{\omega_n^2}{s(s + 2\varsigma\omega_n)}}$$

$$= \frac{K_p \omega_n^2 (1+T_d s)}{s(s+2\varsigma\omega_n)+K_p\omega_n^2(1+T_d s)} = \frac{K_p \omega_n^2 (1+T_d s)}{s^2+2\varsigma\omega_n s+K_p\omega_n^2+K_p\omega_n^2 T_d s}$$

$$= \frac{K_p \omega_n^2 (1+T_d s)}{s^2+(2\varsigma\omega_n+K_p\omega_n^2 T_d)s+K_p\omega_n^2}$$

Inference:

- Increase in zero and damping ratio
- Increase in zero increases the peak overshoot
- But Increase in damping ratio reduces the peak overshoot

Proportional integral derivative (PID) Controller:

Propotional Plus integral plus derivative (PID) Controller produces output signal consists of three terms one propotional to error signal and aother one propotional to integral of error signal and third one propotional to derivative of error signal

$$u(t) = K_p e(t) + \frac{K_p}{T_i}\int_o^t e(t)dt + K_p T_d \frac{de(t)}{dt}$$

Take lapalce transform

$$U(s) = K_p E(s) + \frac{K_p}{T_i}\frac{E(s)}{s} + K_p T_d\, sE(s)$$

The transfer function of PD controller

$$\frac{U(s)}{E(s)} = K_p\left(1+\frac{1}{T_i s}+T_d s\right)$$

Where . K_p - **Proprtional gain** T_i -integral time. T_d -Derivative time

Block diagram

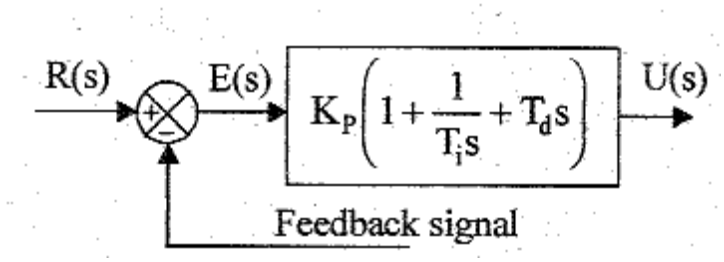

Electronic PID controller

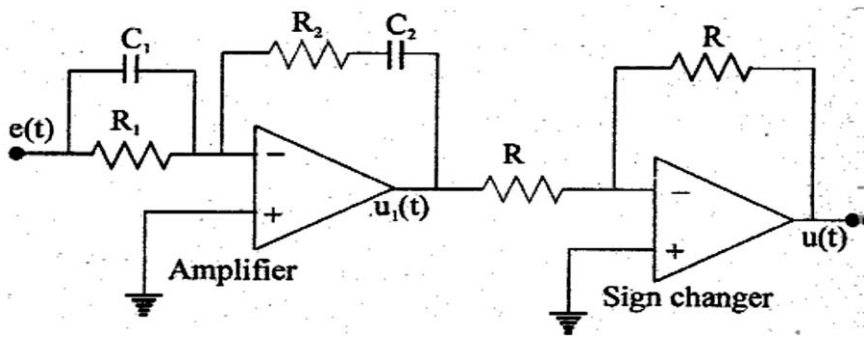

Proportional gain $K_p = \frac{R_2}{R_1}$

integral time. $T_i = R_2C_2$

Derivative time. $T_d = R_1C_1$

Effect of PID controller

- Proportional controller stabilizes the gain but produces a steady state error
- The integral controller eliminates the steady state error
- The derivative controller reduces the overshoot of the response

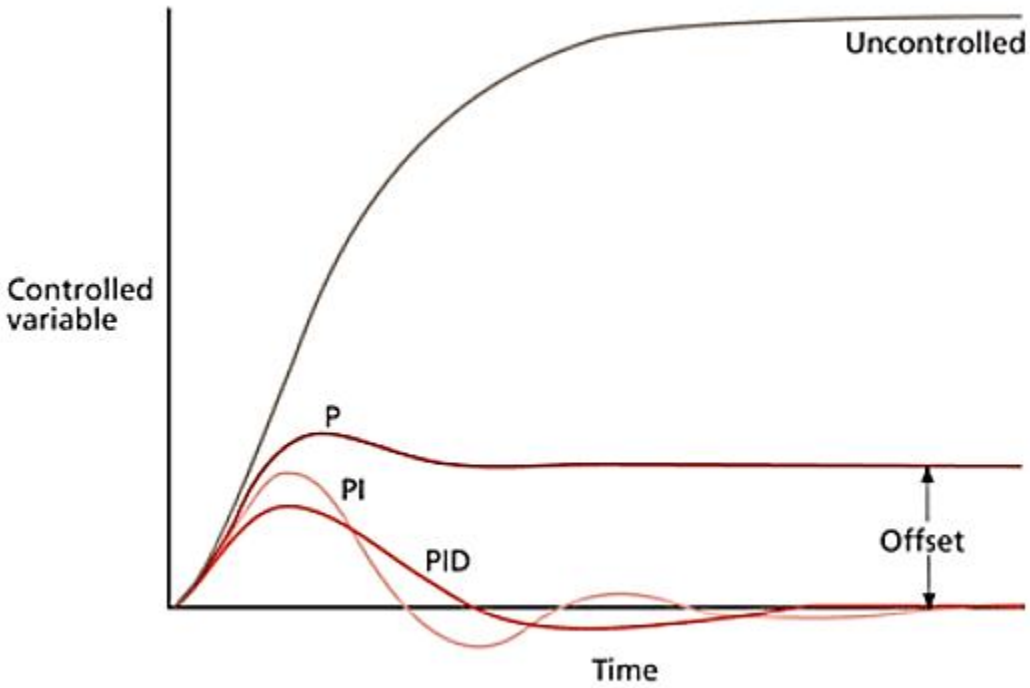

UNIT III FREQUENCY RESPONSE AND SYSTEM ANALYSIS

Closed loop frequency response-Performance specification in frequency domain-Frequency response of standard second order system- Bode Plot - Polar Plot- Nyquist plots-Design of compensators using Bode plots-Cascade lead compensation-Cascade lag compensation-Cascade laglead compensation

3.1 Introduction

The frequency response is the steady state response of a system when the input to the system us a sinusoidal signal.

Let us consider a Linear Time Invariant (LTI) system as shown in Figure 3.1.

Let x(t) is a sinusoidal input signal with unity amplitude. The response or output y(t) is also a sinusoidal signal of same frequency. But it's Magnitude and the Phase angle is different compared with the input signal.

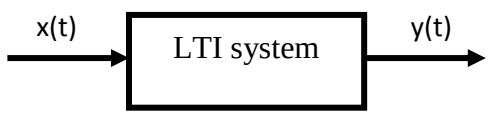

Figure 3.1 LTI system

Where; x(t)= X sin ωt & y(t) = Y sin (ωt + ϕ)

The magnitude and phase relationship between the sinusoidal input and the steady state output of a system is called the frequency response. In LTI systems, the frequency response is independent of the amplitude and the phase of the input signal.

Normally, the frequency response of a system is obtained by varying the frequency of the signal by keeping the magnitude of the input signal at a constant value.

In the system transfer function T(s), if 's' is replaced by 'jω', then the resulting transfer function T(jω) is called the sinusoidal transfer function. Then the frequency response can be obtained from T(jω) and also T(jω) is a complex function of frequency.

The magnitude and phase of T(jω) are functions of frequency and can be evaluated for various values of frequencies.

The frequency response can be evaluated for both open-loop system and closed-loop systems as follows;

Open-loop transfer function, $G(j\omega) = |G(j\omega)| \angle G(j\omega)$ (3.1)

Loop transfer function, $G(j\omega)H(j\omega) = |G(j\omega)H(j\omega)| \angle G(j\omega)H(j\omega)$ (3.2)

Closed- loop transfer function, $\frac{C(jw)}{R(jw)} = M(j\omega) = |M(j\omega)| \angle M(j\omega)$ (3.3)

where $M(j\omega)$ is a closed loop parameter.

Advantages of Frequency response

a. The absolute and relative stability of the closed loop system can be estimated from the knowledge of their open-loop frequency response.

b. The practical testing of systems can be easily carried with available sinusoidal signal generators and precise measuring equipments.

c. The transfer function of complicated systems can be determined experimentally by frequency response tests.

d. The design and parameter adjustment of the open-loop transfer function of a system for specified closed-loop performance is carried out more easily in frequency domain.

e. If the system is designed using the frequency response, the effects of noise disturbance and parameter variations are relatively easy to visualize and incorporate corrective measures.

f. The frequency response analysis and designs can be extended to certain non-linear control systems.

3.2Frequency domain specifications

The performance and characteristics of a system in frequency domain are measured in terms of frequency domain specifications.

The common frequency domain specifications are discussed below;

a. Resonant Peak (M_r)

The maximum value of the magnitude of closed-loop transfer function is called the resonant peak (M_r). A large 'M_r' corresponds to a large overshoot in transient response.

b. Resonant Frequency (ω_r)

The frequency at which the resonant peak occurs is called resonant Frequency (ω_r). This is related to the frequency of oscillation in the step response and thus it is indicative of the speed of transient response.

c. Bandwidth (ω_b)

The bandwidth (ω_b) is the range of frequencies for which the system gain is more than -3 dB. The frequency at which the gain is -3dB is called the cut-off frequency. Bandwidth is normally considered in closed-loop system and it transmits the signals whose frequencies are less than the cut-off frequency. A large bandwidth corresponds to a small rise time or fast response.

d. Cut-off Rate

The slope of the log-magnitude curve near the cut-off frequency is called the cut-off rate. The cut-off rate indicates the ability of the system to distinguish the signal from noise.

e. Gain Margin (K_g)

The Gain margin (K_g) is defined as the reciprocal of the magnitude of open-loop transfer function at phase-cross over frequency. The frequency at which the phase of open loop transfer function is 180° is called the phase cross-over frequency (ω_{pc}).

Gain margin (K_g) = $\dfrac{1}{|G(j\omega_{pc})|}$ (3.4)

Gain margin (K_g) in dB = $20\log K_g = 20\log\dfrac{1}{|G(j\omega_{pc})|} = -20\log|G(j\omega_{pc})|$ (3.5)

The gain margin indicates the amount by which the gain of the system can be increased without affecting the stability of the system.

f. Phase Margin (γ):

The phase margin (γ) is the amount of additional phase lag at the gain cross over frequency required to bring the system to the verge of instability. The gain cross over frequency (ω_{gc}) is the frequency at which the magnitude of the open-loop transfer function is unity.

The phase margin (γ) is obtained by adding 180° to the phase angle ϕ of the open loop transfer function at the gain cross over frequency.

Phase margin (γ) = $180^o + \phi_{gc}$; where $\phi_{gc} = \angle G(j\omega_{gc})$ (3.6)

3.3 Frequency response of second order system

second order system $\dfrac{C(s)}{R(s)} = M(s) = \dfrac{\omega_n^2}{s^2 + 2\zeta\omega_n s + \omega_n^2}$

sinusoidal transfer function obtained by substituting s = jω

$$M(j\omega) = \frac{\omega_n^2}{(j\omega)^2 + 2\zeta\omega_n(j\omega) + \omega_n^2}$$

$$= \frac{\omega_n^2}{-\omega^2 + j2\zeta\omega_n\omega + \omega_n^2}$$

$$= \frac{1}{1-(\frac{\omega}{\omega_n})^2 + j2\zeta\frac{\omega}{\omega_n}}$$

Normalized frequency $u = \dfrac{\omega}{\omega_n}$

$$M(j\omega) = \frac{1}{(1-u^2) + j2\zeta u}$$

M-Magnitude of closed loop transfer function

α – Phase of closed loop transfer function

$$M = |M(j\omega)| = \frac{1}{\left[(1-u^2)^2 + (2\zeta u)^2\right]^{\frac{1}{2}}}$$

$$\alpha = \angle M(j\omega) = -\tan^{-1}(\frac{2\zeta u}{1-u^2})$$

Resonant Peak (M_r): $M_r = \dfrac{1}{2\zeta\sqrt{1-\zeta^2}}$

Resonant Frequency (ω_r) $\omega_r = \omega_n\sqrt{1-2\zeta^2}$

Bandwidth (ω_b) $\omega_b = \omega_n u_b = \omega_n\left[1-2\zeta^2 + \sqrt{2-4\zeta^2+4\zeta^4}\right]^{\frac{1}{2}}$

Gain Margin (K_g)= infinite (∞)

Phase Margin (γ) $\gamma = 90 - \tan^{-1}\left[\dfrac{\left\{-2\zeta^2 + \sqrt{4\zeta^4 + 1}\right\}^{\frac{1}{2}}}{2\zeta}\right]$

3.4 Correlation between frequency domain and time domain specifications:

The correlation between time and frequency response has an explicit form only for first and second order systems. The correlation for the 2nd order system is discussed below.

Chose the standard form of transfer function of second order system:

$$\frac{C(s)}{R(s)} = \frac{\omega_n^2}{s^2 + 2\xi\omega_n s + \omega_n^2} \tag{3.7}$$

Where, ζ – damping ratio and ω_n – undamped natural frequency.

The sinusoidal transfer function of the system is obtained by letting s=jω,

$$\frac{C(j\omega)}{R(j\omega)} = T(j\omega) = \frac{\omega_n^2}{(j\omega)^2 + 2\xi\omega_n(j\omega) + \omega_n^2} = \frac{\omega_n^2}{-\omega^2 + j2\xi\omega_n\omega + \omega_n^2}$$
$$= \frac{\omega_n^2}{\omega_n^2\left(-\dfrac{\omega^2}{\omega_n^2} + j2\xi\dfrac{\omega}{\omega_n} + 1\right)} = \frac{1}{1 - \left(\dfrac{\omega}{\omega_n}\right)^2 + j2\xi\dfrac{\omega}{\omega_n}} = \frac{1}{(1-u^2) + j2\xi u} \tag{3.8}$$

Where, $u = \left(\dfrac{\omega}{\omega_n}\right)$ is the normalized frequency.

Magnitude of closed-loop system, $M = |T(j\omega)| = \dfrac{1}{\sqrt{(1-u^2)^2 + (2\xi u)^2}}$ (3.9)

Phase of closed loop system; $\alpha = \angle T(j\omega) = -\tan^{-1}\left(\dfrac{2\xi u}{1-u^2}\right)$ (3.10)

The magnitude and phase angle characteristics for normalised frequency 'u' for certain values of 'ζ' are shown in Figure (a) and (b). The frequency at which M has a peak value is known as the resonant frequency. The peak value of the magnitude is the resonant peak 'M_r'. At this frequency, the slope of the magnitude curve is zero.

Let ω_r be the resonant frequency and $u_r = \left(\dfrac{\omega_r}{\omega_n}\right)$ be the normalized resonant frequency.

The expression for resonant frequency ω_r can be obtained by differentiating M with respect to ω and equating dM/du to zero.

The M_r and the corresponding phase α_r can be obtained by substituting the expression for ω_r in the equation of M and α.

It can be shown that; $M_r = \dfrac{1}{2\xi\sqrt{1-\xi^2}}$; $u_r = \sqrt{1-2\xi^2}$; $\alpha_r = -tan^{-1}\left[\dfrac{\sqrt{1-2\xi^2}}{\xi}\right]$ and $\omega_r = \omega_n\sqrt{1-2\xi^2}$

When ζ=0, $\omega_r = \omega_n\sqrt{1-2\xi^2} = \omega_n$ and $M_r = \dfrac{1}{2\xi\sqrt{1-\xi^2}} = \infty$

Hence, it is clear that, as ζ tends to zero, ω_r approaches ω_n and M_r approaches infinity.

For $0 < \xi \le 1/\sqrt{2}$, the resonant frequency always has a value less than ω_n and the resonant peak has a value greater than one.

For $\xi > 1/\sqrt{2}$, the condition (dM/du)=0, will not be satisfied for any real value of ω.

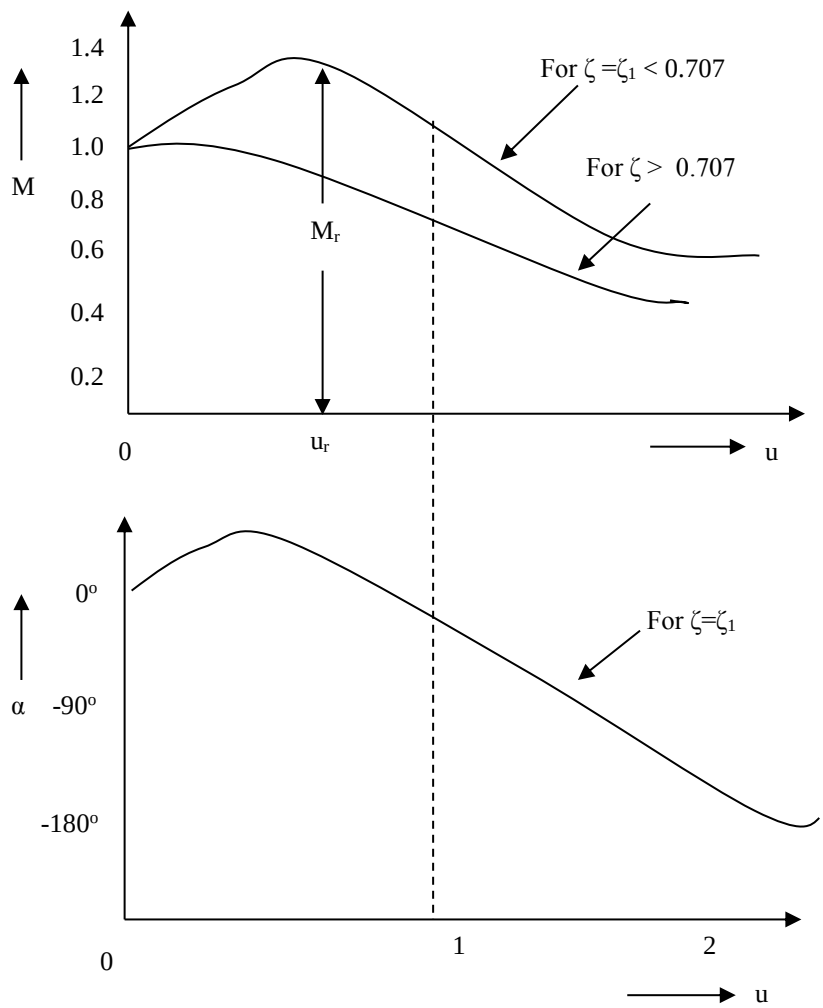

Figure. (a) Magnitude M as a function of u and (b) Phase α as a function of u.

Hence, when $\xi > 1/\sqrt{2}$, the magnitude M decreases monotonically from M=1 at u=0 with increasing u. It follows that, for $\xi > 1/\sqrt{2}$; there is no resonant peak and the greatest value of M equals one.

The frequency at which M has a value of $1/\sqrt{2}$ is of special significance and is called the cut-off frequency ω_c. The signal frequencies above cut-off are greatly attenuated on passing through a system

For feedback control system, the range of frequencies over which $M \geq 1/\sqrt{2}$ is defined as bandwidth ω_b is equal to cut-off frequency ω_c.

In general, the bandwidth of a control system indicates the noise-filtering characteristics of the system. Also, bandwidth gives a measure of the transient response.

The normalized bandwidth, $u_b = \left(\frac{\omega_b}{\omega_n}\right) = \left[1 - 2\xi^2 + \sqrt{2 - 4\xi^2 + \xi^4}\right]^{1/2}$

From the equation of u_b it is clear that, u_b is a function of ζ alone. The graph between u_b and ζ is shown in Figure (c)

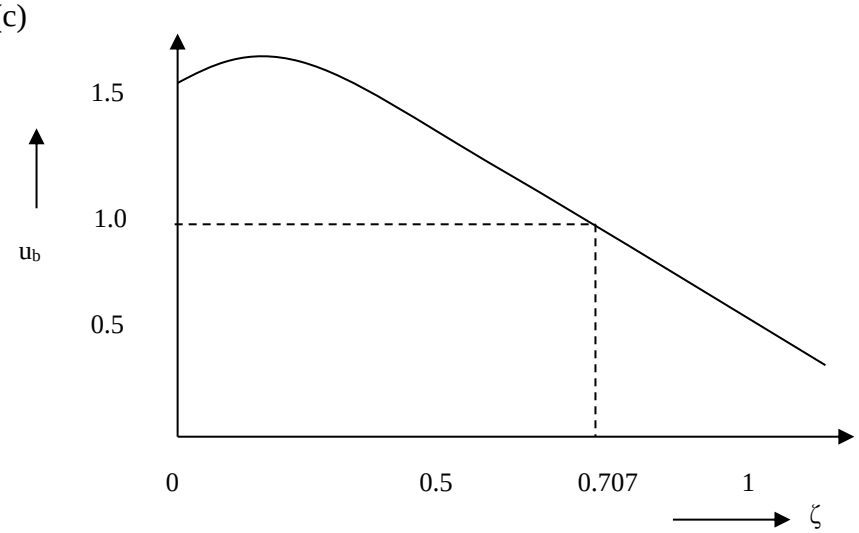

Figure (c). Normalized band-width as a function of ζ

The expression for the damped frequency of oscillation ω_d and peak overshoot M_p of the step response for $0 \leq \xi \leq 1$ are;

Damped frequency $\omega_d = \omega\sqrt{1-\xi^2}$ and Peak overshoot $M_p = e^{\frac{-\xi\Pi}{\sqrt{1-\xi^2}}}$

Comparison of the equation of M_r and M_p reveals that, both are functions of only ζ.

The sketches of Mr and Mp for various value of ζ are shown in Figure (d). The sketches reveal that, a system with a given value of M_r must exhibit a corresponding value of M_p if subjected to a step input. For $\xi > 1/\sqrt{2}$, the resonant peak M_r does not exist and the correlation breaks down. This is not a serious problem as for this range of ζ., the step response oscillations are well damped and M_p is negligible.

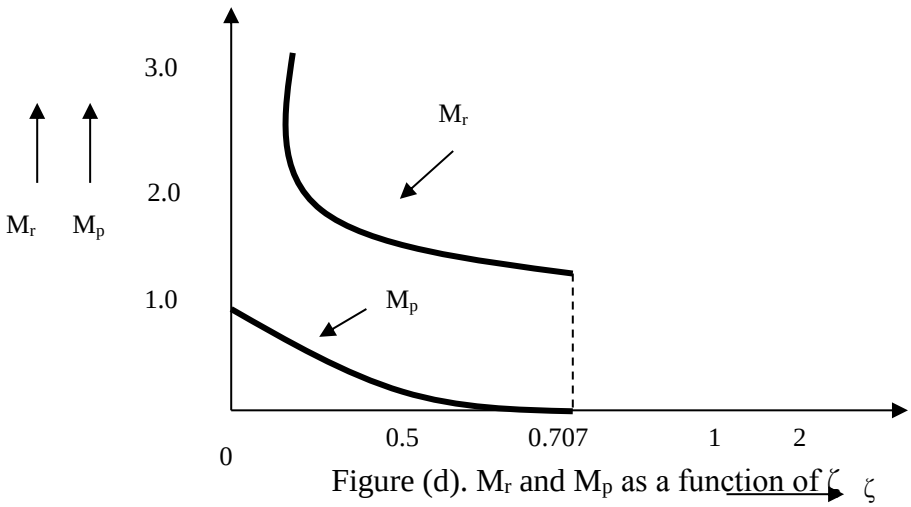

Figure (d). M_r and M_p as a function of ζ

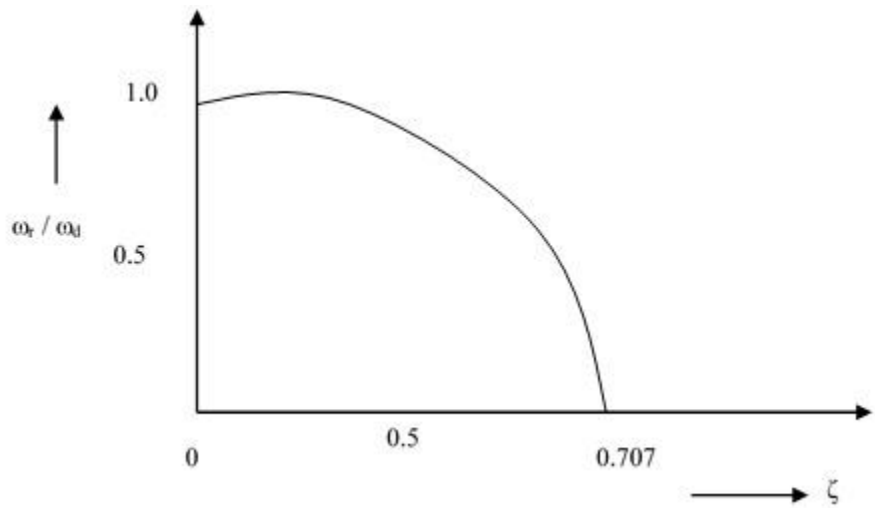

Figure (f). ω_r / ω_b as a function of ζ

The compensation of the equation of ω_r and ω_b reveals that, here exists a definite correlation between them. The sketch of ω_r / ω_b as a function of ζ is depicted in Figure (f).

Frequency response plots:

Frequency response analysis of control system can be carried either analytically or graphically

1.Bode plot
2.ploar plot
3.Nyquist plot
4.Nichols plot
5. M and N circles

3.5 Bode plot:

A sinusoidal transfer function may be represented by two separate plots; one giving the magnitude Vs frequency and the other the phase angle Vs frequency. A bode plot (named after Hendrick W. Bode) consists of two graphs; one is a plot of the logarithm of the magnitude of the sinusoidal transfer function and the other is a plot of the phase angle in degrees; both are plotted against the frequency in logarithmic scale.

In a Bode plot, the logarithmic magnitude of sinusoidal transfer function G(jω) is represented as 20 log $|G(j\omega)|$, where the base of the logarithm is 10. The unit in this representation of the magnitude is decibel (dB). The main advantage of using the logarithmic plot is that the multiplication of magnitudes can be converted into addition.

The Bode plot is sketched using the semi-log sheet shown in Figure 3.2.

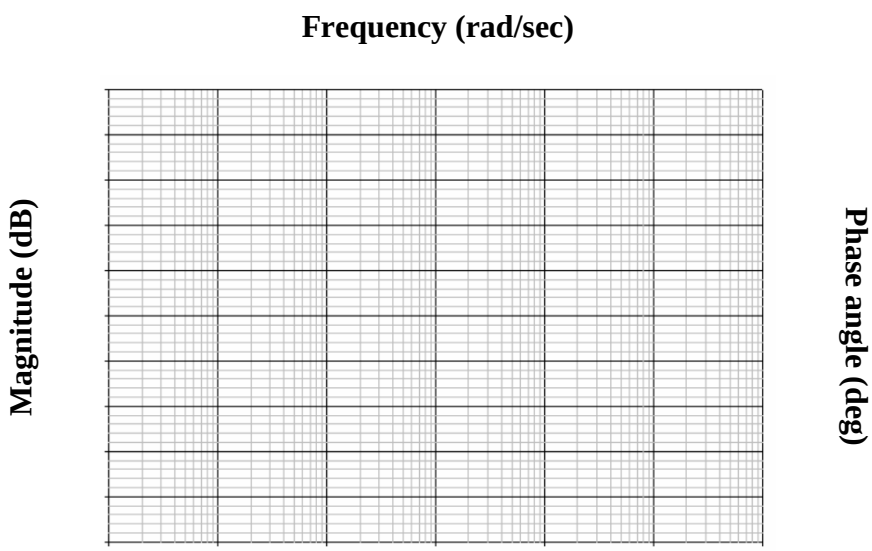

Figure 3.2. Semi-log graph sheet

Example 1.

Let is draw the Bode magnitude plot for the transfer function: $G(s) = \frac{200(s+1)}{(s+10)^2}$

The rearrangement of the transfer function in the time-constant form gives (ie. making the 10 as unity);

$$G(s) = \frac{2(s+1)}{(1+s/10)^2}$$

Therefore, the sinusoidal transfer function in the time-constant form is given by:

$$G(j\omega) = \frac{2(j\omega+1)}{(1+j\omega/10)^2}$$

Our approach is to first to construct an asymptotic plot and then apply corrections to it to get an accurate plot. The corner frequencies of the asymptotic plot in order of their occurrence as frequency increases as;

(i) $\omega_{c1} = 1$; due to zero at s = -1;

(ii) $\omega_{c2} = 10$; due to zero at s = -10

At frequencies less than ω_{c1}, the first corner frequency. Only the factor K=2 is effective. The approximated values are presented in Table 3.1.

Table 3.1 Asymptote approximation table

Factor	**Corner frequency**	**Asymptotic magnitude characteristic**
2	None	Constant magnitude of +6dB
$1+j\omega$	$\omega_{c1} = 1$	Straight line of 0 dB for $\omega < \omega_{c1}$; straight line of +20 dB/decade for $\omega \geq \omega_{c1}$
$1/(1+ j\omega/10)^2$	$\omega_{c2} = 10$	Straight line of 0 dB for $\omega < \omega_{c2}$; straight line of -40 dB/decade for $\omega \geq \omega_2$

Table 3.2 Corrections to asymptotic magnitude plot

Frequency (ω)	0.5	1	2	5	10	20
Net correction (dB)	+1	+3	+1	-2	-6	-2

Step 1: We start with the factor K=2. Its magnitude plot is the asymptote 1; a horizontal straight line at the magnitude of 6 dB.

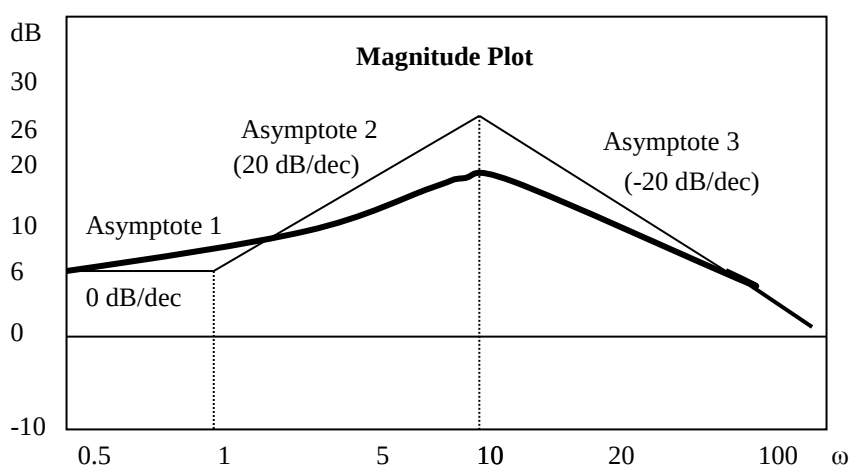

Figure 3.3 (a) Magnitude plot

- Phase Angle value $\angle G(j\omega) = tan^{-1}(\omega) - 2tan^{-1}\left(\frac{\omega}{10}\right)$

ω (rad/sec)	0.5	1	5	10	20	100
$\angle G(j\omega)$; deg	20	34	25	-5.7	-39.7	-79.15

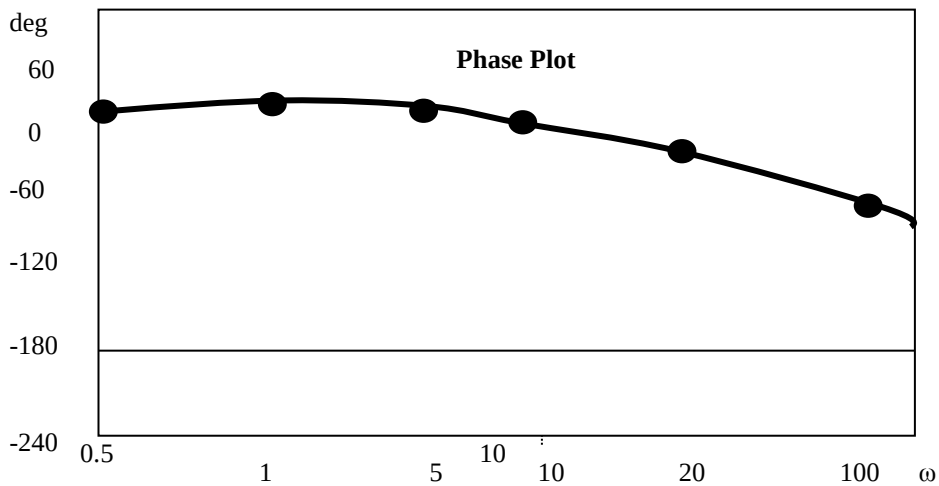

Figure 3.3 (b) Phase plot

Step 2: Let us add to the asymptote 1, the plot of the factor (1+jω) corresponding to the lowest corner frequency ω_{c1}=1. Since this factor contributes zero dB for $\omega \le \omega_{c1}$ =1, the resultant plot up to ω=1 is the same as that of the asymptote 1. For ω > ω_{c1}=1, this factor contributes +20dB/decade such that the resultant plot of the two factor is the asymptote 2 of slope +20 dB/decade passing through (6dB, 1 rad/sec) point. At, ω =ω_{c2}=10, the resultant plot has a magnitude of 26 dB as shown in Figure 3.3.
Step 3: We now add to the resultant plot of step 2, the plot of the factor $1/(1+j\omega/10)^2$ corresponding to the corner frequency ω_{c2}=10. Since this facto contributes 0 dB for $\omega \le \omega_{c2}$ =10, the resultant plot up to ω=10 is the same as that of step2. For $\omega > \omega_{c2} = 10$, this factor contributes -40 dB/dec such that the resultant plot of the three factor is the asymptote 3 of slope (+20) + (-40) = -20 dB/decade passing through magnitude plot of given G(jω).

The corrections at each corner frequency and at an octave above and below the corner frequency are usually sufficient. The corner frequency ω_{c1}=1corresponds to the first-order factor (1+jω); the corrections are +3dB at ω=1, +1dB at ω=0.5 and +1dB at ω=2. The corner frequency ω_{c2}=10 corresponds to $1/(1+j\omega/10)^2$: the corrections are presented in Table 3.2.

Example 2.

Consider the transfer function: $G(j\omega) = \dfrac{10(1+j\omega/2)}{(j\omega)^2(1+j\omega)}$

Our approach is to first to construct an asymptotic plot and then apply corrections to it to get an accurate plot. The corner frequencies of the asymptotic plot in order of their occurrence as frequency increases as;

(i) ω_{c1} = 1; due to simple pole;
(ii) ω_{c2} = 2; due to simple zero

At frequencies less than ω_{c1}, only the factor 10 $(j\omega)^2$ is effective.
The asymptotic magnitude plot of G(jω) is shown in Figure 3.4.

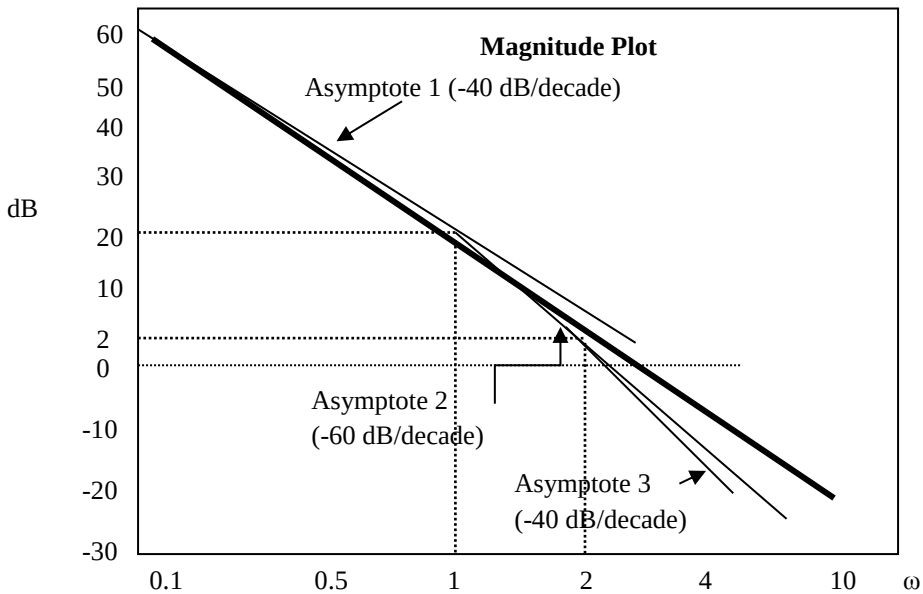

Figure 3.4 (a) Magnitude plot

- Phase Angle value $\angle G(j\omega) = tan^{-1}\left(\frac{\omega}{2}\right) - 180 - tan^{-1}(\omega)$

ω (rad/sec)	0.1	0.5	1	2	4	10
$\angle G(j\omega)$; deg	-183	-192	-198	-198	-192	-180

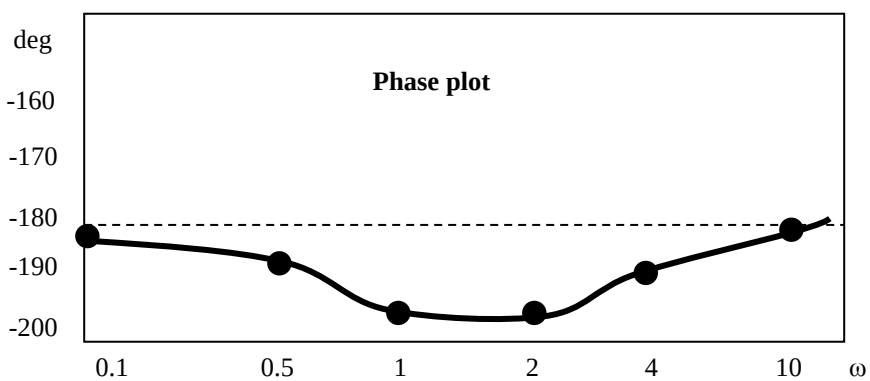

Figure 3.4 (b) Phase plot

Table 3.3 Corrections to asymptotic magnitude plot

Frequency (ω)	0.5	1	2	4
Net correction (dB)	-1	-2	+2	+1

Step 1: We start with the factor 10 (jω)2 corresponding to double pole at the origin. Its magnitude plot is the asymptote 1, having a slope of -40 dB/decade and passing through the point 20 log 10 = 20 dB at ω=1. Asymptote 1 intersects the 0 dB line at $\omega = \sqrt{10}$.

Step 2: Let us now add to the asymptote 1, the plot of the factor 1/(1+jω) corresponding to the lowest corner frequency ω_{c1}=1. Since this factor contributes zero dB for $\omega \le 1$, the resultant plot up to ω=1 is the same as the asymptote 1. For ω > 1 this factor contributes -20 dB/decade such that the resultant plot of the two factors is the asymptote 2 of slope (-40)+(-20) = -60 dB/decade

passing through the point 20 dB; 1 rad/sec. At $\omega = \omega_{c2}=2$. The resultant plot has a magnitude of 2dB as shown in Figure 3.4.

Step 3: We now add to the resultant plot of step 2, the plot of the factor $(1+j\omega/2)$ corresponding to the corner frequency $\omega_{c2}=2$. This gives rise to a straight line of slope +20 dB/decade for $\omega > 2$, which when added to asymptote 2 results in asymptote 3 of slope (-60)+(+20)= -40 dB/decade passing through 2 dB, 2 rad/sec point.

To the asymptotic plot obtained are corrected as per the values shown in Table 3.3 and the exact magnitude plot is constructed.

Example 3.

Given $G(s) = \dfrac{Ke^{-0.2s}}{s(s+2)(s+8)}$.

Find K so that the system is stable with Gain margin equal to 6 db and (b) Phase margin equal to 450 using bode plots.

Solution:

Given that; $G(s) = \dfrac{Ke^{-0.2s}}{s(s+2)(s+8)} = \dfrac{Ke^{-0.2s}}{sx2(s/2+1)x8(s/8+1)} = \dfrac{0.0625Ke^{-0.2s}}{s(1+0.5s)(1+0.125s)}$

Let K=1 and replacing 's' with 'jω', we get;

$$G(j\omega) = \frac{0.0625Ke^{-0.2j\omega}}{j\omega(1+0.5j\omega)(1+0.125j\omega)}$$

- ***Magnitude plot:***

The corner frequencies are;
$\omega_{c1}= 1/0.5 = 2$ rad/sec and $\omega_{c2}= 1/0.125 = 8$ rad/sec

Magnitude plot Table

Term	**Corner frequency (rad/sec)**	**Slope (dB/dec)**	**Change in Slope (dB/dec)**
$\dfrac{0.0625}{j\omega}$	-	-20	-
$\dfrac{1}{1+j0.5\omega}$	$\omega_{c1}= 1/0.5 = 2$	-20	-20-20=-40
$\dfrac{1}{1+j0.125\omega}$	$\omega_{c2}= 1/0.125 = 8$	-20	-40-20=-60

Choosing $\omega_l < \omega_{c1}$ and $\omega_h > \omega_{c2}$., Let $\omega_l = 0.5$ rad/sec and $\omega_h = 50$ rad/sec.

Let the magnitude is ; $A = |G(j\omega)|; dB$

Finding A for ω_l, ω_{c1}, ω_{c2}, and ω_h

- When $\omega = \omega_l$; $A = 20\log\left|\frac{0.0625}{j\omega}\right| = 20\log\left|\frac{0.0625}{0.5}\right| = -18dB$
- When $\omega = \omega_{c1}$; $A = 20\log\left|\frac{0.0625}{j\omega}\right| = 20\log\left|\frac{0.0625}{2}\right| = -30dB$
- When $\omega = \omega_{c2}$; $A = Slope\ from\ \omega_{c1}\ to\ \omega_{c2}\ x\ \log\frac{\omega_{c2}}{\omega_{c1}} + A\ at\ \omega_{c1}$

  $= -40x\log\frac{8}{2} + (-30) = -54dB$
- When $\omega = \omega_h$; $A = Slope\ from\ \omega_{c2}\ to\ \omega_h\ x\ \log\frac{\omega_h}{\omega_{c2}} + A\ at\ \omega_{c2}$

  $= -60x\log\frac{50}{82} + (-54) = -102dB$
  - ***Phase plot:***

The phase angle of G(jω) as a function of ω is given by;

$$\phi = -20\omega\ x\frac{180}{\pi} - 90 - tan^{-1}0.5\omega - tan^{-1}0.125\omega$$

For various values of the assumed 'ω'; the phase angle 'ϕ' is computed as shown below:

Phase plot Table

ω (rad/sec)	0.01	0.1	0.5	1	2	3	4
Φ (deg)	-90	-94	-114	-134	-172	-202	-226

Computation of K:

Phase margin: $\gamma = 180 + \phi_{gc}$

When, $\gamma = 45^o$; $\phi_{gc} = \gamma - 180 = 45 - 180 = -135^o$

With K=1, the dB gain at $\phi = -135^o$ is -24dB. This gain should be made zero to have to PM of 45°. Hence to every point of magnitude plot a dB gain of 24dB should be added. The corrected magnitude plot is obtained by shifting the plot with K=1 by 24dB upwards. The magnitude correction is independent of frequency. Hence, the magnitude of 24dB is contributed by the term K. The value of K is calculated by equating 20 log K to 24dB.

Hence, 20 log K = 24; K= $10^{24/20}$; K= 15.84

With K=1; the gain margin = -(-34) = 34dB.But the required GM is 6dB. Hence; 34-6 = 28dB is to be added for every point and the final value will be;

20 LOG k = 28; K= $10^{28/20}$; K= 25.12.

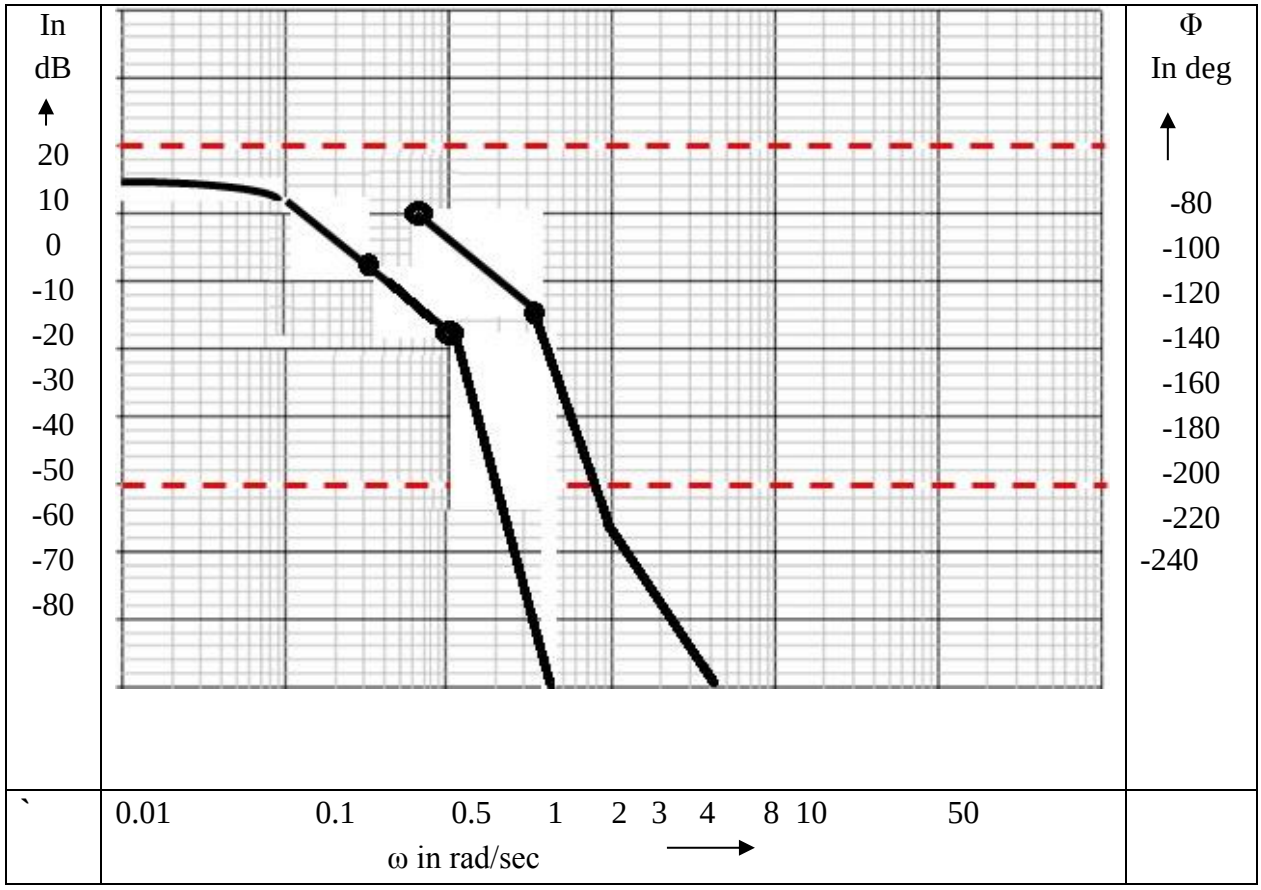

3.6 **Polar plot (Nyquist plot):**

Polar plot is a plot which can be drawn between magnitude and phase. Here, the magnitudes are represented by normal values only.

The polar form of $G(j\omega)H(j\omega)$ is

$$G(j\omega)H(j\omega)=|G(j\omega)H(j\omega)|\angle G(j\omega)H(j\omega)$$

The Polar plot is a plot, which can be drawn between the magnitude and the phase angle of $G(j\omega)H(j\omega)$ by varying ω from zero to ∞. The polar graph sheet is shown in the following figure.

This graph sheet consists of concentric circles and radial lines. The concentric circles and the radial lines represent the magnitudes and phase angles respectively. These angles are represented by positive values in anti-clock wise direction. Similarly, we can represent angles with negative values in clockwise direction. For example, the angle 270^0 in anti-clock wise direction is equal to the angle -90^0 in clockwise direction.

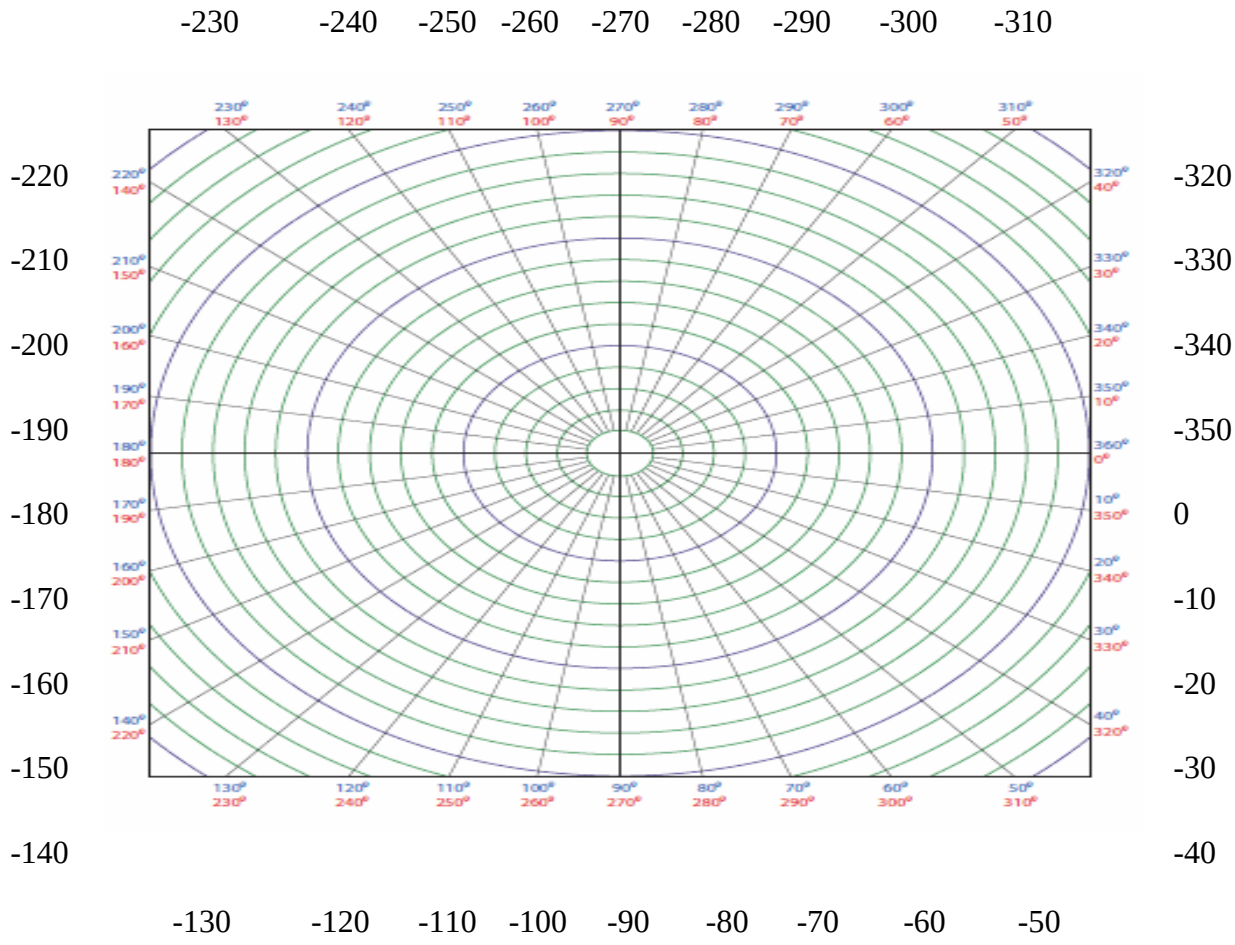

Rules for Drawing Polar Plots

Follow these rules for plotting the polar plots.

- Substitute, $s=j\omega$ in the open loop transfer function.
- Write the expressions for magnitude and the phase of $G(j\omega)H(j\omega)$.
- Find the starting magnitude and the phase of $G(j\omega)H(j\omega)$ by substituting $\omega=0$. So, the polar plot starts with this magnitude and the phase angle.
- Find the ending magnitude and the phase of $G(j\omega)H(j\omega)$ by substituting $\omega=\infty$. So, the polar plot ends with this magnitude and the phase angle.
- Check whether the polar plot intersects the real axis, by making the imaginary term of $G(j\omega)H(j\omega)$ equal to zero and find the value(s) of ω.
- Check whether the polar plot intersects the imaginary axis, by making real term of $G(j\omega)H(j\omega)$ equal to zero and find the value(s) of ω.
- For drawing polar plot more clearly, find the magnitude and phase of $G(j\omega)H(j\omega)$ by considering the other value(s) of ω.

Consider a first order system

$$G(s) = \frac{1}{1+\tau s}$$

Where τ - time constant

Representing G(s) in the frequency domain form G(jω)

$$G(j\omega) = \frac{1}{1+j\tau\omega}$$

Multiply both numerator and denominator by conjugate of denominator 1-jωτ

$$G(j\omega) = \frac{1-j\tau\omega}{1-j\tau\omega}\frac{1}{1+j\tau\omega} = \frac{1-j\tau\omega}{1+\tau^2\omega^2}$$

$$G(j\omega) = \frac{1}{1+\tau^2\omega^2} + j\frac{-\tau\omega}{1+\tau^2\omega^2}$$

Magnitude $|G(j\omega)| = \sqrt{\left(\frac{1}{1+\tau^2\omega^2}\right)^2 + \left(\frac{-\tau\omega}{1+\tau^2\omega^2}\right)^2} = \frac{1}{\sqrt{1+\tau^2\omega^2}}$

Phase $\phi = \tan^{-1}\left(\frac{\frac{-\tau\omega}{1+\tau^2\omega^2}}{\frac{1}{1+\tau^2\omega^2}}\right) = \tan^{-1}\left(\frac{-\tau\omega}{1}\right)$

Point 1 the start of the plot where ω = 0

$$|G(j\omega)| = \frac{1}{\sqrt{1+0}} = 1 \quad \phi = \tan^{-1}\left(\frac{0}{1}\right) = 0$$

Point 2 the end of the plot where ω = ∞

$$|G(j\omega)| = \frac{1}{\sqrt{1+\infty}} = 0 \quad \phi = \tan^{-1}\left(\frac{-\infty}{1}\right) = -90$$

Point 3 where the plot crosses the real axis Im(G(jω)) = 0

$$\frac{-\tau\omega}{1+\tau^2\omega^2} = 0, \quad \omega = 0 \text{ and } \omega = \infty$$

Point 4 where the plot crosses the Imaginary axis Re(G(jω)) = 0

$$\frac{1}{1+\tau^2\omega^2} = 0 \; ; \; \omega = \infty$$

As point 3 coincides with Point 1 , 2 and Point 4 coincides with Point 2, we need more values of G(jω) evaluated at different frequencies , taking $\omega = \frac{1}{\tau}$

$$|G(j\omega)| = \frac{1}{\sqrt{1+1}} = \frac{1}{\sqrt{2}} \quad \phi = \tan^{-1}\left(\frac{-1}{1}\right) = -45$$

Sketching the plot for $\frac{1}{1+\tau s}$

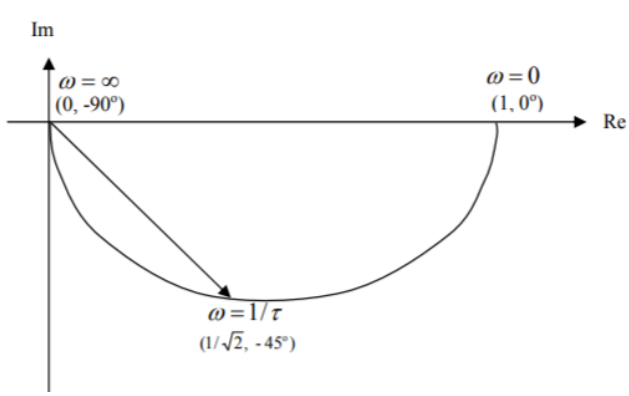

Example 1:

Consider the open loop transfer function of a closed loop control system.

$$G(s)H(s)=1 / s(s+1)(2s+1)$$

Let us draw the polar plot for this control system using the above rules.

Step 1 − Substitute, $s=j\omega$ in the open loop transfer function.

$$G(j\omega)H(j\omega)=1/j\omega(j\omega+1)(2j\omega+1)$$

The magnitude of the open loop transfer function is

$$M=\frac{1}{\omega(\sqrt{\omega^2+1}\sqrt{4\omega^2+1}}$$

The phase angle of the open loop transfer function is

$$\phi=-90^{O}-\tan^{-1}\omega-\tan^{-1}2\omega$$

Step 2 − The following table shows the magnitude and the phase angle of the open loop transfer function at $\omega=0$ rad/sec and $\omega=\infty$ rad/sec.

Frequency (rad/sec)	**Magnitude**	**Phase angle(degrees)**
0	∞	-90 or 270
∞	0	-270 or 90

So, the polar plot starts at $(\infty,-90^0)$ and ends at $(0,-270^0)$. The first and the second terms within the brackets indicate the magnitude and phase angle respectively.

Step 3 − Based on the starting and the ending polar co-ordinates, this polar plot will intersect the negative real axis. The phase angle corresponding to the negative real axis is -180^0 or 180^0. So, by equating the phase angle of the open loop transfer function to either -180^0 or 180^0, we can compute the following:

ω (rad/sec)	0.35	0.4	0.45	0.5	0.6	0.7	1.0
$\lvert G(j\omega)\rvert$	2.2	1.8	1.5	1.2	0.9	0.7	0.3
$\angle G(j\omega); deg$	-144	-150	-156	-162	-171	-180	-198

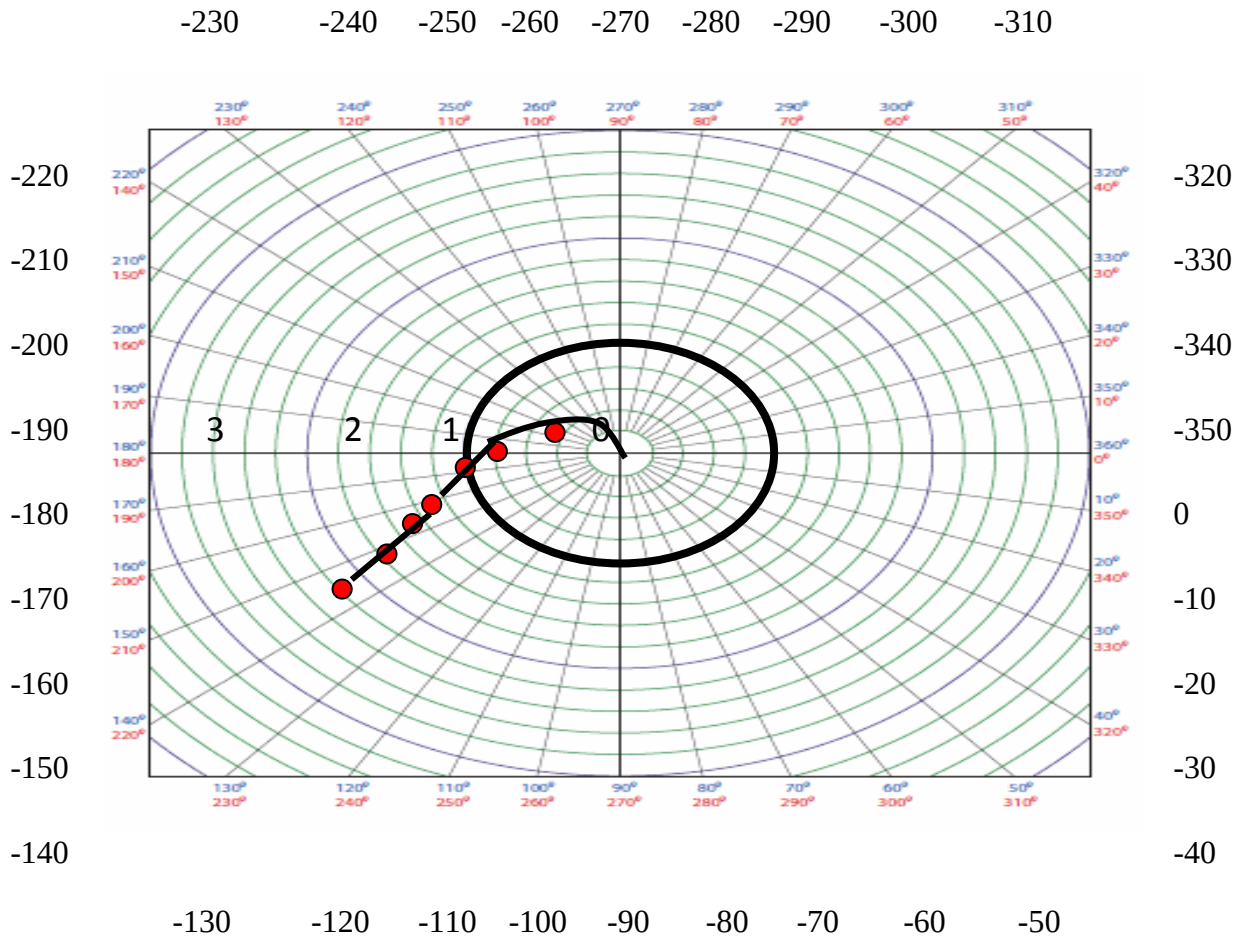

Gain Margin = 1/0.7= 1.43 and Phase margin = 180-168=12°

Example 2:

Sketch the polar plot for the transfer function; $G(s)=\dfrac{10(s+2)}{s(s+1)(s+3)}$

Solution:

Step 1:By replacing s=jω; we get $G(j\omega)=\dfrac{10(j\omega+2)}{j\omega(j\omega+1)(j\omega+3)}$

Step 2: The magnitude and the phase angle will be;

$$|G(j\omega)|=\frac{10\sqrt{\omega^2+4}}{\omega(\sqrt{\omega^2+1})(\sqrt{\omega^2+9})}$$

$$\angle G(j\omega)=-90+\tan^{-1}\frac{\omega}{2}-\tan^{-1}\omega-\tan^{-1}\frac{\omega}{3}$$

Step3: By giving the values of ω and calculating the $|G(j\omega)|$ and $\angle G(j\omega)$; we get the following table

ω (rad/sec)	0	0.8	1	1.5	3	5	α
$\lvert G(j\omega)\rvert$	α	6.77	5	2.76	0.9	0.36	0
$\angle G(j\omega);deg$	-90	-122	-127	-136	-150	-160	-180

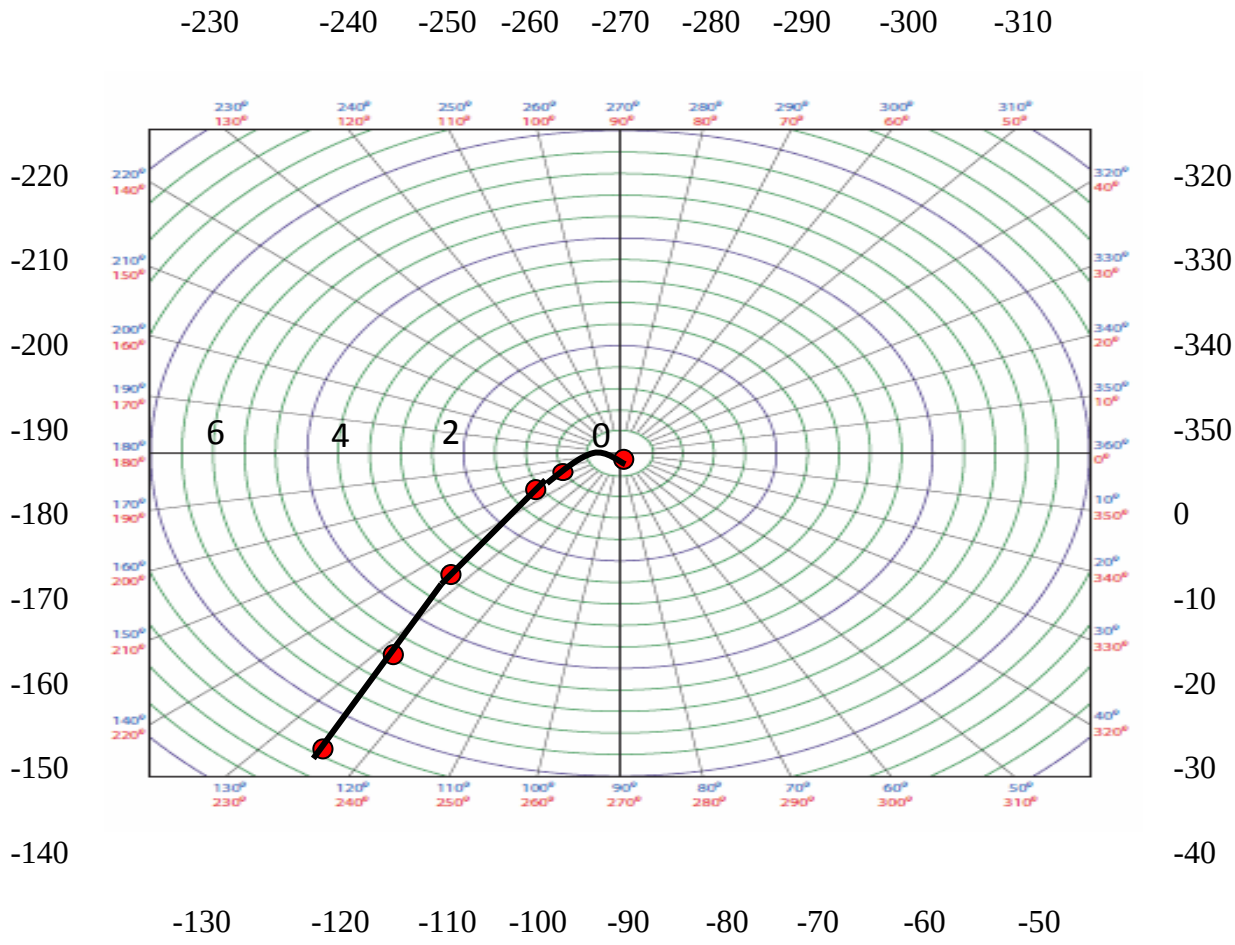

Gain Margin = 1/0= α and Phase margin = 180-148=32°

3.7 Effect of Lag, lead and lag-lead compensation on frequency response- Analysis:

Necessary of Compensation:

- In order to obtain the desired performance of the system, we use compensating networks. Compensating networks are applied to the system in the form of feed forward path gain adjustment.
- Compensate a unstable system to make it stable.
- A compensating network is used to minimize overshoot.
- These compensating networks increase the steady state accuracy of the system. An important point to be noted here is that the increase in the steady state accuracy brings instability to the system.
- Compensating networks also introduces poles and zeros in the system thereby causes changes in the transfer function of the system. Due to this, performance specifications of the system change.

Methods of Compensation:

Connecting compensating circuit between error detector and plants known as series compensation.

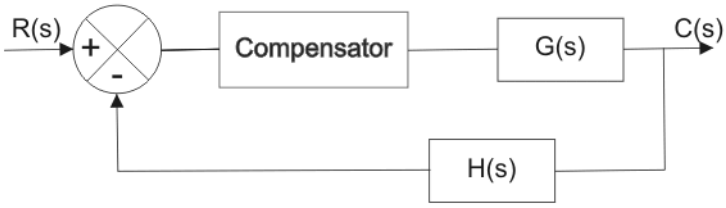

Figure (1) Series Compensator

When a compensator used in a feedback manner called feedback compensation.

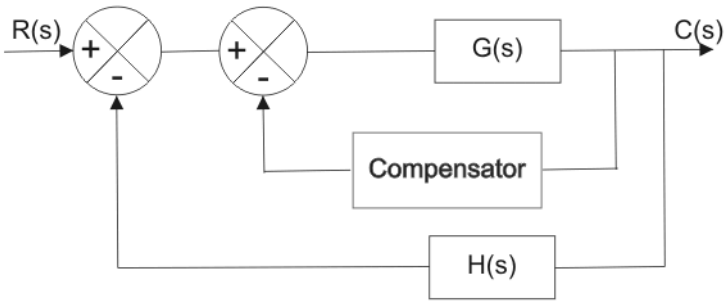

Figure (2) Feedback Compensator

A combination of series and feedback compensator is called load compensation.

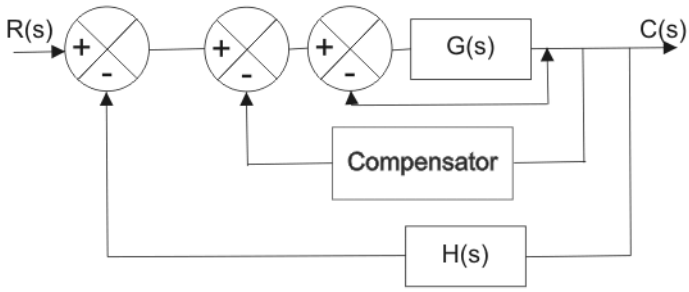

Figure (3) Load Compensator

Now what are compensating networks? A compensating network is one which makes some adjustments in order to make up for deficiencies in the system. Compensating devices are may be in the form of electrical, mechanical, hydraulic etc. Most electrical compensator are RC filter. The simplest network used for compensator are known as lead, lag network.

Phase Lead Compensation

A system which has one pole and one dominating zero (the zero which is closer to the origin than all over zeros is known as dominating zero.) is known as lead network. If we want to add a dominating zero for compensation in control system then we have to select lead compensation network. The basic requirement of the phase lead network is that all poles and zeros of the transfer function of the network must lie on (-) ve real axis interlacing each other with a zero

located at the origin of nearest origin. Given below is the circuit diagram for the phase lead compensation network.

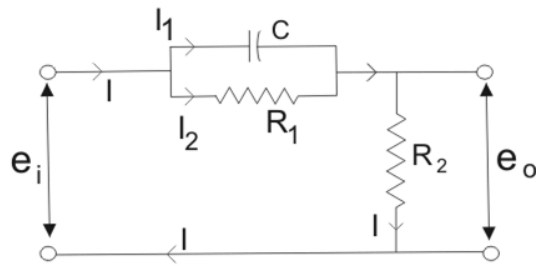

Figure (4) Phase Lead Compensation Network

$$I_1 = C\frac{d}{dt}(e_i - e_0)$$

$$I_2 = \frac{e_i - e_0}{R_1}$$

$$I = I_1 + I_2 = C\frac{d}{dt}(e_i - e_0) + \frac{e_i - e_0}{R_1}$$

$$Again, I = \frac{e_0}{R_2}$$

From above circuit we get, Equating above expression of I we get,

$$\frac{e_0}{R_2} = C\frac{d}{dt}(e_i - e_0) + \frac{e_i - e_0}{R_1}$$

Now let us determine the transfer function for the given network and the transfer function can be determined by finding the ratio of the output voltage to the input voltage. So taking Laplace transform of both side of above equations,

$$\frac{E_0(s)}{R_2} = \frac{1}{R_1}[E_i(s) - E_o(s)] + Cs[E_i(s) - E_o(s)](\textit{neglecting initial condition})$$

$$\Rightarrow \frac{E_0(s)}{R_2} + \frac{1}{R_1}[E_o(s)] + CsE_o(s) = \frac{E_i(s)}{R_1} + CsE_i(s)$$

$$\Rightarrow \frac{E_0(s)}{E_i(s)} = \frac{\dfrac{1 + sCR_1}{R_1}}{\dfrac{R_1 + R_2 + sR_1R_2C}{R_2R_1}}$$

$$\Rightarrow \frac{E_0(s)}{E_i(s)} = \frac{R_2}{R_1 + R_2}\left[\frac{1 + sCR_1}{1 + \dfrac{sR_1R_2C}{R_2R_1}}\right]$$

On substituting the α = (R1 +R2)/ R2 and T = {(R1R2) /(R1 +R2)} in the above equation. Where, T and α are respectively the time constant and attenuation constant,

we have transfer function; $G_{Lead}(s) = \frac{E_o(s)}{E_i(s)} = \frac{1}{\alpha}\left[\frac{1 + \alpha sT}{1 + sT}\right]$

The above network can be visualized as an amplifier with a gain of 1/α. Let us draw the pole zero plot for the above transfer function.

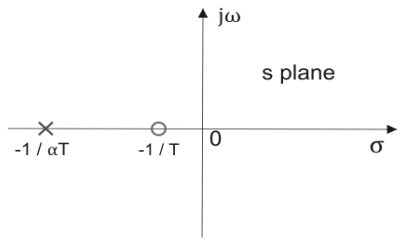

Pole Zero Plot of Lead Compensating Network

Clearly we have -1/T (which is a zero of the transfer function) is closer to origin than the -1/(αT) (which is the pole of the transfer function).Thus we can say in the lead compensator zero is more dominating than the pole and because of this lead network introduces positive phase angle to the system when connected in series. Let us substitute s = jω in the above transfer function and also we have α < 1. On finding the phase angle function for the transfer function we have;

$$\theta(\omega) = tan^{-1}(\omega T) - tan^{-1}(\alpha\omega T)$$

Now in order to find put the maximum phase lead occurs at a frequency let us differentiate this phase function and equate it to zero. On solving the above equation we get;

$$\alpha = \frac{1 - sin\theta_m}{1 + sin\theta_m}$$

Where, θ_m is the maximum phase lead angle. And the corresponding magnitude of the transfer function at maximum θ_m is 1/a.

Effect of Phase Lead Compensation:

- The velocity constant Kv increases.
- The slope of the magnitude plot reduces at the gain crossover frequency so that relative stability improves and error decrease due to error is directly proportional to the slope.
- Phase margin increases.
- Response becomes faster.
- Advantages of Phase Lead Compensation
- Let us discuss some of the advantages of the phase lead compensation-
- Due to the presence of phase lead network the speed of the system increases because it shifts gain crossover frequency to a higher value.
- Due to the presence of phase lead compensation maximum overshoot of the system decreases.
- Disadvantages of Phase Lead Compensation
- Some of the disadvantages of the phase lead compensation -
- Steady state error is not improved.

3.8 Phase Lag Compensation

A system which has one zero and one dominating pole (the pole which is closer to origin that all other poles is known as dominating pole) is known as lag network. If we want to add a

dominating pole for compensation in control system then, we have to select a lag compensation network. The basic requirement of the phase lag network is that all poles and zeros of the transfer function of the network must lie in -ve real axis interlacing each other with a pole located or on the nearest to the origin. Given below is the circuit diagram for the phase lag compensation network.

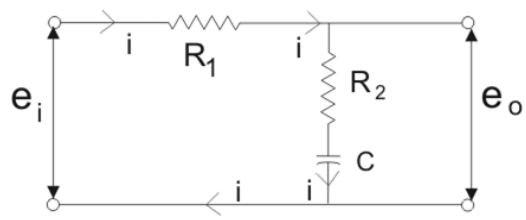

Phase Lag Compensating Network

We will have the output at the series combination of the resistor R2 and the capacitor C. From the above circuit diagram, we get Now let us determine the transfer function for the given network and the transfer function can be determined by finding the ratio of the output voltage to the input voltage. Taking Laplace transform of above two equations we get,

$$e_i = iR_1 + iR_2 + \frac{1}{C}\int idt$$

$$e_o = iR_2 + \frac{1}{C}\int idt$$

$$E_i(s) = R_1 I(s) + R_2 I(s) + \frac{1}{Cs} I(s)$$

$$E_o(s) = R_2 I(s) + \frac{1}{Cs} I(s)$$

Transfer function, $G_{lag}(s) = \frac{E_o(s)}{E_i(s)} = \frac{R_2 + \frac{1}{Cs}}{R_1 + R_2 + \frac{1}{Cs}} = \frac{R_2 Cs + 1}{(R_1 + R_2)Cs + 1}$

On substituting it in the above equation (Where, T and β are respectively the time constant and DC gain), we have The above network provides a high frequency gain of 1 / β. Let us draw the pole zero plot for the above transfer function.

$$T = R_2 C \text{ and } \beta = \left\{ \frac{R_2 + R_1}{R_1} \right\} \qquad Transferfunctio, G_{lag}(s) = \frac{1 + Ts}{1 + \beta Ts}$$

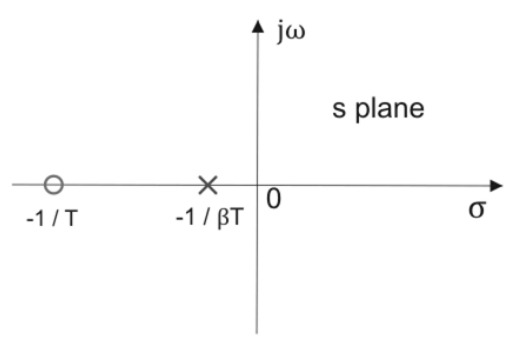

Pole Zero Plot of Lag Network

Clearly we have -1/T (which is a zero of the transfer function) is far to origin than the -1 / (βT) (which is the pole of the transfer function). Thus we can say in the lag compensator pole is more dominating than the zero and because of this lag network introduces negative phase angle to the system when connected in series. Let us substitute s = jω in the above transfer function and also we have a < 1. On finding the phase angle function for the transfer function we have;

$$\theta(\omega) = tan^{-1}(\omega T) - tan^{-1}(\beta\omega T)$$

Now in order to find put the maximum phase lag occurs at a frequency let us differentiate this phase function and equate it to zero. On solving the above equation we get Where, θm is the maximum phase lead angle. Remember β is generally chosen to be greater than 10.

$$\beta = \frac{1 - sin\theta_m}{1 + sin\theta_m}$$

***Effect of Phase Lag Compensation**

- Gain crossover frequency increases.
- Bandwidth decreases.
- Phase margin will be increase.
- Response will be slower before due to decreasing bandwidth, the rise time and the settling time become larger.

***Advantages of Phase Lag Compensation**

- Let us discuss some of the advantages of phase lag compensation -
- Phase lag network allows low frequencies and high frequencies are attenuated.
- Due to the presence of phase lag compensation the steady state accuracy increases.
- Disadvantages of Phase Lag Compensation
- Some of the disadvantages of the phase lag compensation -
- Due to the presence of phase lag compensation the speed of the system decreases.

3.9 Phase Lag-Lead Compensation

With single lag or lead compensation may not satisfy design specifications. For an unstable uncompensated system, lead compensation provides fast response but does not provide enough phase margin whereas lag compensation stabilize the system but does not provide enough bandwidth. So we need multiple compensators in cascade. Given below is the circuit diagram for the phase lag- lead compensation network.

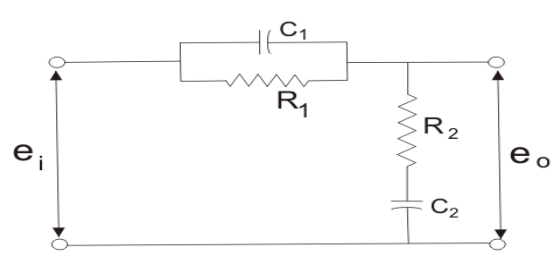

Lag Lead Compensating Network

Now let us determine transfer function for the given network and the transfer function can be determined by finding the ratio of the output voltage to the input voltage.

Transfer function, $G_{lag-lead}(s) = \frac{E_o(s)}{E_i(s)} = \frac{\left(s + \frac{1}{R_1C_1}\right)\left(s + \frac{1}{R_2C_2}\right)}{s^2 + \left(\frac{1}{R_1C_1} + \frac{1}{R_2C_2} + \frac{1}{R_2C_1}\right)s + \frac{1}{R_1R_2C_1C_2}}$

$$\Rightarrow G_{lag-lead}(s) = \frac{E_o(s)}{E_i(s)} = \frac{(R_1C_1s+1)(R_2C_2s+1)}{R_1R_2C_1C_2s^2 + (R_1C_1 + R_2C_2 + R_2C_1)s + 1}$$

On substituting the $\alpha T_1 = R_1C_1$, $R_2C_2 = \beta T_2$, $R_1R_2C_1C_2 = \alpha\beta T_1T_2$ and $T_1T_2 = R_1R_2C_1C_2$ in the above equation (where T1, T2 and α, β are respectively the time constants and attenuation constants). We have Let us draw the pole zero plot for the above transfer function.

$$Transferfunctio, G_{lag-lead}(s) = \frac{(1+\alpha T_1 s)(1+\beta T_2 s)}{(1+T_1 s)(1+T_2 s)}$$

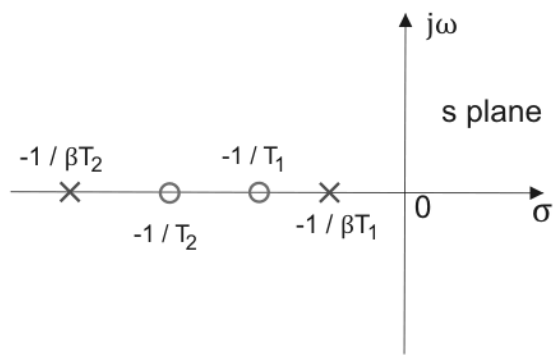

Pole Zero Plot Lag Lead Network

Clearly we have -1/T (which is a zero of the transfer function) is far to the origin than the -1/(βT)(which is the pole of the transfer function). Thus we can say in the lag-lead compensation pole is more dominating than the zero and because of this lag-lead network may introduces positive phase angle to the system when connected in series.

***Advantages of Phase Lag Lead Compensation**

- Let us discuss some of the advantages of phase lag- lead compensation-
- Due to the presence of phase lag-lead network the speed of the system increases because it shifts gain crossover frequency to a higher value.
- Due to the presence of phase lag-lead network accuracy is improved.

COMPENSATOR – DESIGN USING BODE PLOTS

3.10 DESIGN OF LAG COMPENSATOR

Procedure for LAG compensator design

1. Choose the value of K in uncompensated system to meet the steady state error requirement.
2. Sketch the bode plot of uncompensated system
3. Determine the phase margin of the uncompensated system from the bode plot. If the phase margin does not satisfy the requirement then lag compensation is required.

4. Choose a suitable value of the phase margin of the compensated system.

Let γ_d - desired phase margin as given in

Let γ_n - Phase Margin of the compensated system.

Now, $\gamma_n = \gamma_d + \varepsilon$

ε - additional phase lag to compensate for shift in gain cross over frequency.

Chose an initial value of $\varepsilon = 5^o$

5. Determine the new gain cross over frequency ω_{gcn} .

Let, Φ_{gcn}= phase of $G(j\omega)$ at new gain cross over frequency, ω_{gcn}.

Now, $\gamma_n = 180^o + \Phi_{gcn}$ or $\Phi_{gcn} = \gamma_n - 180^o$

The new gain crossover frequency , ω_{gcn} is given by the frequency at which the phase of $G(j\omega)$ is Φ_{gcn}

6. Determine the parameter, β of the compensator. The value of β is given by the magnitude of $G(j\omega)$ at new gain cross over frequency ω_{gcn}. Find the db gain (A_{gcn}) at new gain cross over frequency, ω_{gcn}.

Now, $A_{gcn} = 20\log\beta$ or $\beta = 10^{\frac{A_{gcn}}{20}}$

7. Determine the transfer function of lag compensator. Place the zero of the compensator arbitrarily at $1/10^{th}$ of the new gain cross over frequency, ω_{gcn}.

Zero of the lag compensator

$$T = \frac{10}{\omega_{gcn}} \quad \text{and } z_c = \frac{1}{T}$$

Pole of the lag compensator

$$p_c = \frac{1}{\beta T}$$

The transfer function of lag compensator

$$Gc(s) = \frac{s + \frac{1}{T}}{s + \frac{1}{\beta T}} = \beta\left(\frac{1 + sT}{1 + s\beta T}\right)$$

8. Determine the open loop transfer function of the compensated system
9. Calculate the actual phase angle of the compensated system using the compensated transfer function at new gain cross over frequency ω_{gcn}.
10. If new phase margin not satisfies the given specification, repeat the procedure from 4 to 10 by increasing the ε value by 5.

Example 1

A unity feedback system has an open loop transfer function G(s). Design a suitable lag compensator so that phase margin is 40º and the steady state error for ramp input is less than or equal to 0.2.

$$G(s) = \frac{k}{s(1+2s)}$$

1. Calculation of gain k

given $e_{ss} < 0.2$ for ramp input, let $e_{ss}=0.2$

wkt $e_{ss}=1/Kv$ for ramp input.

$Kv=1/e_{ss} = 1/0.2=5$

$$K_v = \underset{s\to 0}{Lt}\ sG(s)H(s)$$

$$= \underset{s\to 0}{Lt}\ s\left(\frac{k}{s(1+2s)}\right) = k$$

$$so\ \ k = Kv = 5$$

Bode plot of uncompensated system.

Given that $G(s) = \frac{5}{s(1+2s)}$, $G(j\omega) = \frac{5}{j\omega(1+j2\omega)}$

The corner frequency is 0.5 rad/sec

Term	Corner Frequency rad/sec	Slope db/dec	Change in slope db/dec
$\frac{5}{j\omega}$	-	-20	
$\frac{1}{(1+2j\omega)}$	0.5	-20	-40

Select a frequency $\omega_l < \omega_{c1}$ and $\omega_h > \omega_{c2}$

ω_l =0.1 rad/sec, ω_h =10 rad/sec,

$$\omega_l = 0.1,\ \ A = 20\log\left|\frac{5}{j\omega}\right| = 20\log\left(\frac{5}{\omega}\right) = 20\log\left(\frac{5}{0.1}\right) = 34\ \text{db}$$

$$\omega_c = 0.5,\ \ A = 20\log\left|\frac{5}{j\omega}\right| = 20\log\left(\frac{5}{\omega}\right) = 20\log\left(\frac{5}{0.5}\right) = 20\ \text{db}$$

$$\omega_h = 10,\ \ A = \left[(\text{slope from}\ \omega_c\ \text{to}\ \omega_h)\text{x}\log(\frac{\omega_h}{\omega_c})\right] + A(\text{at}\ \ \omega = \omega_c)$$

$$= \left[(-40)\text{x}\log\left(\frac{10}{0.5}\right)\right] + 20 = -32\ \text{db}$$

$$\Phi = -90^0 - \tan^{-1}(2\omega)$$

ω	0.1	0.5	1	5	10
Φ	-101	-135	-153	-174	-177

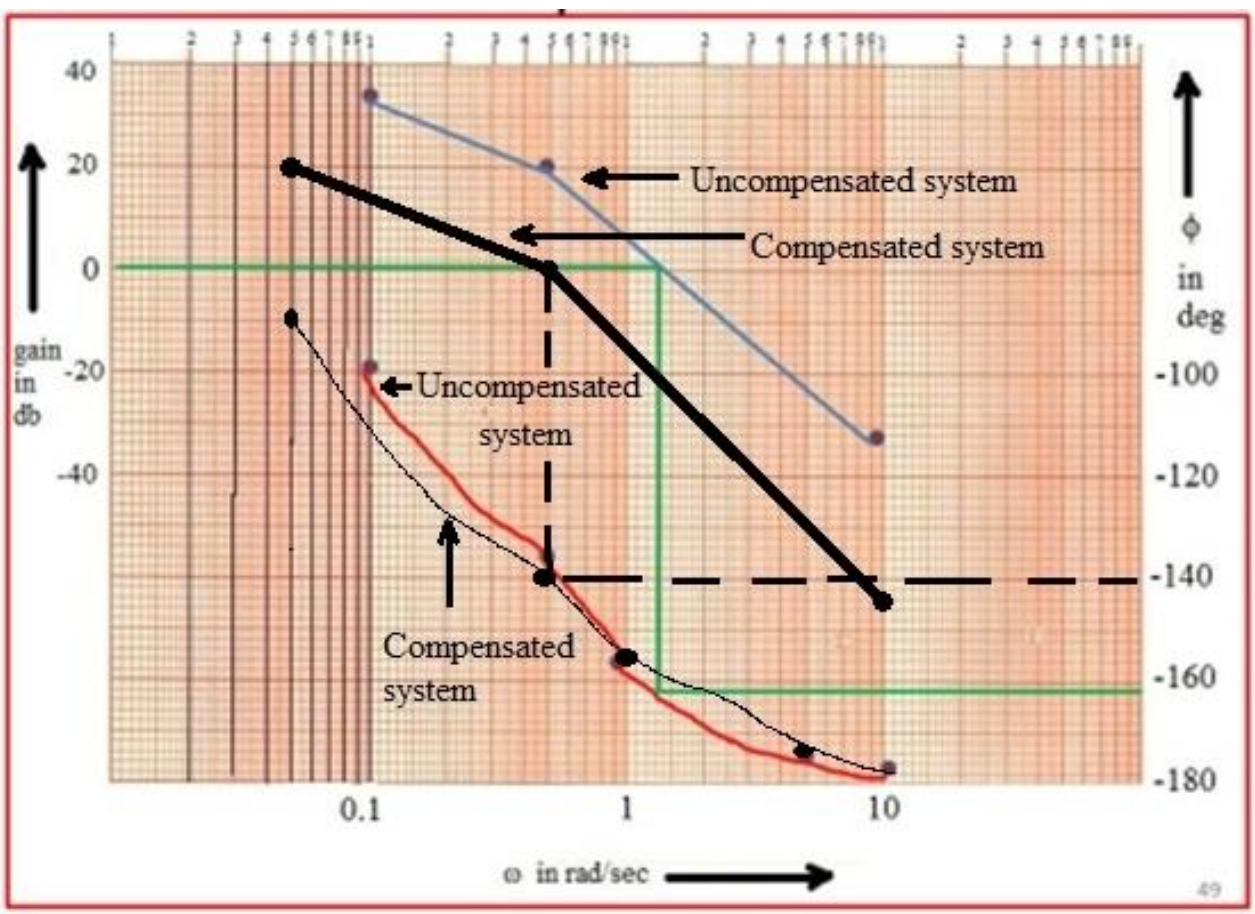

Phase margin of uncompensated system

Φ = -162°

PM = 180 +(-162°)=18°

But the desired PM is 40°

PM of compensated system

$\gamma_n = \gamma_d + 5° = 40° + 5° = 45°$

wkt $\gamma_n = 180^o + \Phi_{gcn}$

$\Phi_{gcn} = 45° - 180^o = -135°$

From the bode plot find the new ω_{gcn} and magnitude for new $\Phi_{gcn} = -135°$

$\omega_{gcn} = 0.5$ rad/sec

Magnitude $A_{gcn} = 20$ db.

$$\beta = 10^{\frac{A_{gcn}}{20}} = 10^{\frac{20}{20}} = 10$$

Zero of the lag compensator

$$z_c = \frac{1}{T} = \frac{\omega_{gcn}}{10} \quad or$$

$$T = \frac{10}{\omega_{gcn}} = \frac{10}{0.5} = 20$$

Pole of the lag compensator

$$p_c = \frac{1}{\beta T} = \frac{1}{10x20} = 0.005$$

$$Gc(s) = \frac{s + \frac{1}{T}}{s + \frac{1}{\beta T}} = \beta\left(\frac{1 + sT}{1 + s\beta T}\right) = 10\left(\frac{1 + 20s}{1 + 200s}\right)$$

Open transfer function of new system with compensator is

OL=Gc(s)*G(s)

$$G_0(s) = \frac{5(1 + 20s)}{s(1 + 200s)(1 + 2s)}$$

The phase angle of the new system is given by

$$\Phi = \tan^{-1}(20\omega) - 90^0 - \tan^{-1}(200\omega) - \tan^{-1}(2\omega)$$

The phase angle at new gain cross over fruequcy (0.5 rad/sec) is -140^0 .

Phase margin (PM) = 180 +(-140°)=40°

Hence the new phase margin is 40^0 .

The compensator satisfies the requirement. Hence the design is acceptable.

Note:

If new PM is not meet the specifications. Increase the ε value and them proceed the step 4 to 10.

3.11 DESIGN OF LEAD COMPENSATOR

Procedure for LEAD compensator design

1. Determine k
2. Draw bode plot
3. Determine the Phase margin (γ)
4. Calculate the phase angle needed
5. $\phi_m = \gamma_d - \gamma + \varepsilon$

   ϕ_m = max phase lead angle of the lead compensator

   γ_d - Desired phase margin

   γ – PM of uncompensated system

   ε- additional phase lead needed for compensation (5°)

6. Determine the TF of Lead compensator

$$\alpha = \frac{1-\sin\phi_m}{1+\sin\phi_m}, \quad A = -20\log\left(\frac{1}{\sqrt{\alpha}}\right)$$

From bode plot determine, ω_m at which the magnitude $G(j\omega)$ is A.

$$T = \frac{1}{\omega_m\sqrt{\alpha}}$$

$$G_c(s) = \frac{s+\frac{1}{T}}{s+\frac{1}{\alpha T}} = \alpha\frac{(1+sT)}{(1+\alpha sT)}$$

Example

Design a phase lead compensator for the system $G(s) = \dfrac{k}{s(s+1)}$ **to satisfy the following specifications**

(i) The phase margin of the system ≥45°

(ii) Steady state error for a unit ramp input ≤ 1/15

(iii) The gain cross over frequency of the system must be less than 7.5 rad/sec.

Solution:

1. Determine k

$e_{ss} = 1/15 = 1/K_v$

So, $K_v=15$

Wkt,

$$K_v = \underset{s\to 0}{Lt}\ sG(s)H(s)$$

$$= \underset{s\to 0}{Lt}\ s\left(\frac{k}{s(s+1)}\right) = k$$

$$so\ \ k = Kv = 15$$

Bode plot of uncompensated system.

Given that

$$G(s) = \frac{15}{s(1+s)}$$

$$G(j\omega) = \frac{15}{j\omega(1+j\omega)}$$

The corner frequency is 1 rad/sec

Term	**Corner Frequency rad/sec**	**Slope db/dec**	**Change in slope db/dec**
$\frac{15}{j\omega}$	-	-20	
$\frac{1}{(1+j\omega)}$	1	-20	-40

Select a frequency $\boldsymbol{\omega_l} < \omega_c$ and $\boldsymbol{\omega_h} > \omega_c$

ω_l =0.1 rad/sec, ω_h =10 rad/sec,

$$\omega_l = 0.1,\ \ A = 20\log\left|\frac{15}{j\omega}\right| = 20\log\left(\frac{15}{\omega}\right) = 20\log\left(\frac{15}{0.1}\right) = 44\ \text{db}$$

$$\omega_c = 1,\ \ A = 20\log\left|\frac{15}{j\omega}\right| = 20\log\left(\frac{15}{\omega}\right) = 20\log\left(\frac{15}{1}\right) = 24\ \text{db}$$

$$\omega_h = 10,\ \ A = \left[(\text{slope from}\ \omega_c\ \text{to}\ \omega_h)\text{x}\log\left(\frac{\omega_h}{\omega_c}\right)\right] + A(\text{at}\ \omega = \omega_c)$$

$$= \left[(-40)\text{x}\log\left(\frac{10}{1}\right)\right] + 24 = -16\ \text{db}$$

$$\phi = -90° - \tan^{-1}\omega$$

$\boldsymbol{\omega}$ rad/sec	**0.1**	**0.5**	**1**	**2**	**5**	**10**
Φ in degree	-96	-117	-135	-153	-169	-174

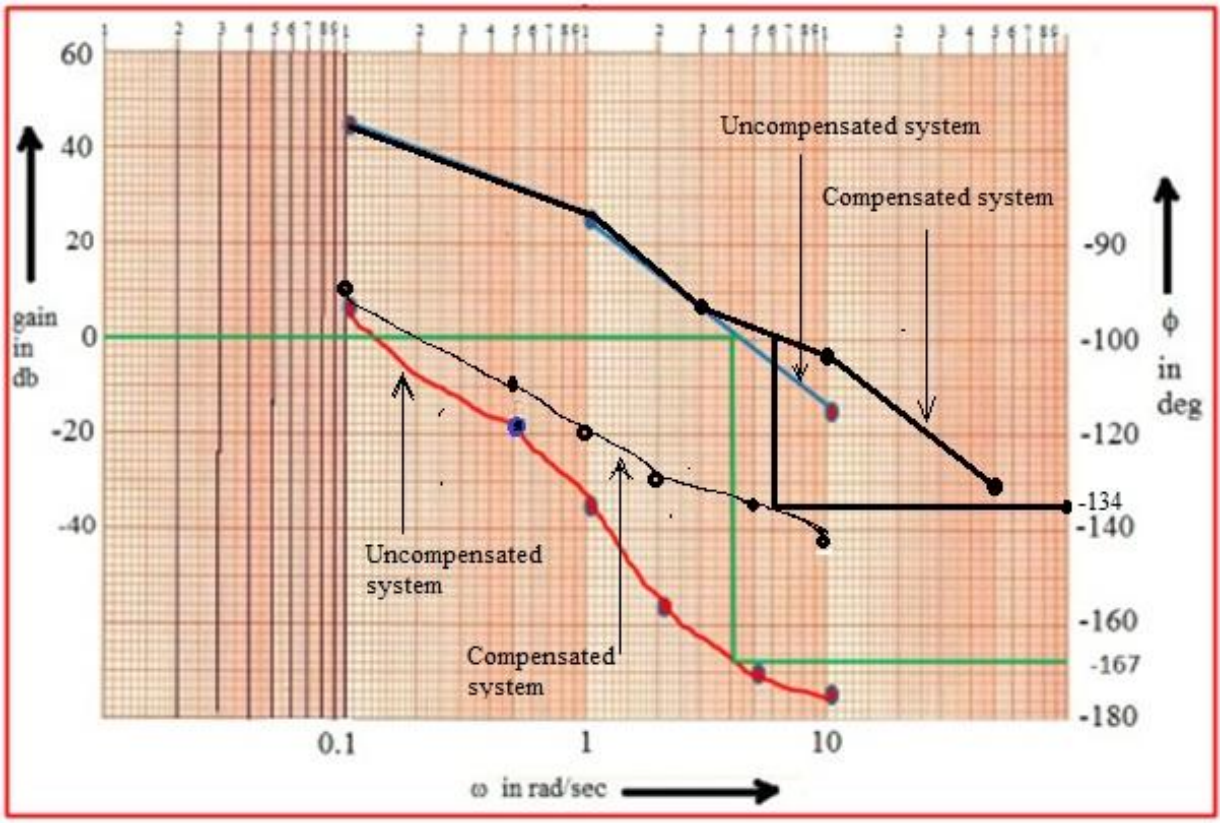

From the bode plot

φ=-167 so PM=180+(-167)=13°

Step 4: find φ_m

γ_d= 45°, $\varphi_m = \gamma_d - \gamma + \varepsilon$=45-13+5=37°

Step 5

$$\alpha = \frac{1-\sin 37}{1+\sin 37} = 0.25$$

$$A_{(at\,\alpha)} = -20\log\left(\frac{1}{\sqrt{\alpha}}\right) = -20\log\left(\frac{1}{\sqrt{0.25}}\right) = -6\ db$$

From the bode plot ω_m corresponding to A= -6db, ω_m=5.6 rad/sec

$$T = \frac{1}{\omega_m\sqrt{\alpha}} = \frac{1}{5.6\sqrt{0.25}} = 0.36$$

The transfer function of the LEAD Compensator

$$G_c(s) = \alpha \frac{(1+sT)}{(1+\alpha sT)} = 0.25\frac{(1+0.36s)}{(1+0.09s)}$$

Open transfer function of new system with compensator is
OL=Gc(s)*G(s)

$$G_0(s) = \frac{15(1+0.36s)}{s(1+0.09s)(1+s)}$$

3.12 DESIGN OF LAG-LEAD COMPENSATOR

Procedure for Lag-Lead compensator design

1. Determine k
2. Draw bode plot
3. Determine the Phase margin (γ)
4. Calculate the phase angle needed

   $\gamma_n = \gamma_d + \varepsilon$

   γ_n - Phase Margin of the compensated system.

   γ_d - Desired phase margin

   ε- additional phase lag needed for compensation

5. Determine the new gain cross over frequency ω_{gcn} from the bode plot at ϕ_{gcn}

   $\phi_{gcn} = \gamma_n - 180^o$

   and choose $\omega_{gcl} > \omega_{gcn}$

6. Calculate β

   Find the db gain (A_{gcl}) at ω_{gcl} from bode plot

   $$\beta = 10^{\frac{A_{gcl}}{20}}$$

7. Determine the TF of **Lag** section

   $$T_1 = \frac{10}{\omega_{gcl}}$$

   $$G_1(s) = \beta\left(\frac{1+sT_1}{1+s\beta T_1}\right)$$

8. Determine the TF of **Lead** section

Take α =1/β

Determine, ω_m (bode plot) at which the magnitude is

$$A = -20\log\left(\frac{1}{\sqrt{\alpha}}\right),$$

$$T_2 = \frac{1}{\omega_m\sqrt{\alpha}}$$

$$G_2(s) = \alpha\frac{(1+sT_2)}{(1+\alpha sT_2)}$$

$$G_c(s) = \beta\left(\frac{1+T_1 s}{1+\beta T_1 s}\right) * \alpha\left(\frac{1+T_2 s}{1+\alpha T_2 s}\right)$$

Example 1:

Consider a feedback control system with open loop transfer function

$G(s) = \dfrac{K}{s(s+5)}$**. Design a lag-lead compensator to meet the following specifications.**

Kv ≥10, Phase margin=40^0 , Bandwidth=12 rad/sec.

Solution:

Given, $G(S) = \dfrac{K}{S(S+5)}$, Kv≥10, Phase Margin=40, bandwidth=12 rad/sec.

Step 1: Determine K

Velocity Error Constant $K_V = \underset{S\to 0}{lt}\, S.G(S) = \underset{S\to 0}{lt}\, S.\dfrac{K}{S(S+5)} = \dfrac{K}{5} = 10$

K=50

Therefore $G(S) = \dfrac{50}{S(S+5)} = \dfrac{10}{S(1+0.2S)}$

Step 2: Bode Plot of uncompensated system

Put S=jω

$$G(j\omega) = \frac{10}{j\omega(1+0.2j\omega)}$$

Magnitude Plot

Corner Frequency ω_c=5rad/sec

Let ω_l=1 rad/sec and ω_h=50 rad/sec

Term	Corner Frequency rad/sec	Slope db/dec	Change in slope db/dec
$\dfrac{10}{j\omega}$	-	-20	
$\dfrac{1}{(1+0.2j\omega)}$	5	-20	-40

Let A=Magnitude in db

At $\omega = \omega_l$ $\quad A = 20\log\frac{10}{1} = 20db$

At $\omega = \omega_c$ $\quad A = 20\log\frac{10}{5} = 6db$

At $\omega = \omega_h$ $\quad A = -40\log\frac{50}{5} + 6 = -34db$

Phase Plot: $\phi = \angle G(j\omega) = -90 - \tan^{-1} 0.2\omega$

ω	1	5	10	50
ϕ	-101.3	-135	-153.4	-174.3

Step 3:

From Plot Gain crossover frequency of uncompensated system $\phi_{gc} = -143^\circ$

Now Phase Margin of uncompensated system $\gamma = 180 + \phi_{gc} = 180 - 143 = 37^\circ$

Step 4: The desired Phase Margin $\gamma_d = 40^\circ$

The new Phase Margin of compensated system $\gamma_n = \gamma_d + \varepsilon = 40^\circ + 10 = 50^\circ$

Step 5: Determine New Gain crossover frequency

$\gamma_n = 180 + \phi_{gcn} \Rightarrow \phi_{gcn} = \gamma_n - 180 = 50 - 180 = -130^\circ$

From the plot frequency corresponding to -130 deg is 3.8 rad/sec

Let ω_{gcn}=5 rad/sec

Step 6: From plot magnitude at ω_{gcn} is A_{gcl}=6db

$A_{gcl} = 20\log\beta \Rightarrow \beta = 10^{A_{gcl}/20} = 1.99$

Step 7:Determine the transfer function of Lag section

Zero of Lag compensator $Z_{C1} = \frac{1}{T_1} = \frac{\omega_{gcl}}{10}$

$T_1 = \frac{10}{\omega_{gcl}} = 2, \quad P_{c1} = \frac{1}{\beta T_1} = \frac{1}{3.98}$

Transfer function of Lag section is $G_{C1} = 1.99\frac{(1+2S)}{(1+3.98S)}$

Step 8: Determine the transfer function of Lead section

Let $\alpha = 1/\beta = 0.5025$

The db gain corresponding to ω_m is $-20\log\frac{1}{\sqrt{\alpha}} = -3.db$, From plot frequency corresponding to -3db is ω_m= 8.4rad/sec

$$T_2 = \frac{1}{\omega_m\sqrt{\alpha}} = 0.16$$

Therefore Transfer function of Lead section is $G_{C2} = 0.5025\frac{(1+0.16S)}{(1+0.0804S)}$

Step 9: Determine the transfer function of Lag-lead compensator

$$G_C(s) = G_{C1} * G_{C2} = \frac{(1+2S)}{(1+3.98S)}\frac{(1+0.16S)}{(1+0.0804S)}$$

Step 10: Transfer function of the System

$$G_o(s) = G_C(s) * G(S) = \frac{(1+2S)}{(1+3.98S)}\frac{(1+0.16S)}{(1+0.0804S)}\frac{10}{S(1+0.2S)}$$

Step 11: Bode Plot of Compensated System

$$G_o(j\omega) = \frac{10(1+2j\omega)(1+0.16j\omega)}{j\omega(1+3.98j\omega)(1+0.0804j\omega)(1+0.2j\omega)}$$

Magnitude Plot

Let ω_l=0.1 rad/sec and ω_h=50 rad/sec

Term	Corner Frequency rad/sec	Slope db/dec	Change in slope db/dec
$\frac{10}{j\omega}$	-	-20	
$\frac{1}{(1+3.98j\omega)}$	0.25	-20	-40
$(1+2j\omega)$	0.5	20	-20
$\frac{1}{(1+0.2j\omega)}$	5	-20	-40
$(1+0.16j\omega)$	6.25	20	-20
$\frac{1}{(1+0.0804j\omega)}$	12.43	-20	-40

Let A=Magnitude in db

At ω= ω_l $\quad A = 20\log\frac{10}{0.1} = 40db$

At ω= ω_{c1} $\quad A = 20\log\frac{10}{0.25} = 32db$

At ω= ω_{c2} $\quad A = -40\log\frac{0.5}{0.25} + 32 = 20db$

At ω= ω_{c3} $\quad A = -20\log\frac{5}{0.5} + 20 = 0db$

At ω= ω_{c4} $\quad A = -40\log\frac{6.25}{5} + 0 = -3.876db$

At ω= ω_{c5} $\quad A = -20\log\frac{12.43}{6.25} - 3.876 = -9.8db$

At ω= ω_h $\quad A = -40\log\frac{50}{12.43} - 9.8 = -33.98db$

$$G_o(j\omega) = \frac{10(1+j\omega)(1+0.075j\omega)}{j\omega(1+0.4466j\omega)(1+0.16785j\omega)(1+0.2j\omega)}$$

Phase Plot:

$$\phi = \angle G(j\omega) = \tan^{-1}2\omega + \tan^{-1}0.16\omega - 90 - \tan^{-1}3.98\omega - \tan^{-1}0.0804\omega - \tan^{-1}0.2\omega$$

ω	0.1	0.5	1	5	10	50
ϕ	-101	-112	-109	-121	-136	-168

From the plot new Gain crossover frequency of compensated system $\phi_{gc} = -121^\circ$

Now Phase Margin of uncompensated system $\gamma = 180 + \phi_{gc} = 180 - 121 = 59^\circ$

Hence the design is satisfied for the compensator $G_C(s) = \frac{(1+2S)}{(1+3.98S)}\frac{(1+0.16S)}{(1+0.0804S)}$ and the transfer function of compensated system is

$$G_o(S) = \frac{10(1+2S)(1+0.16S)}{S(1+3.98S)(1+0.0804S)(1+0.2S)}$$

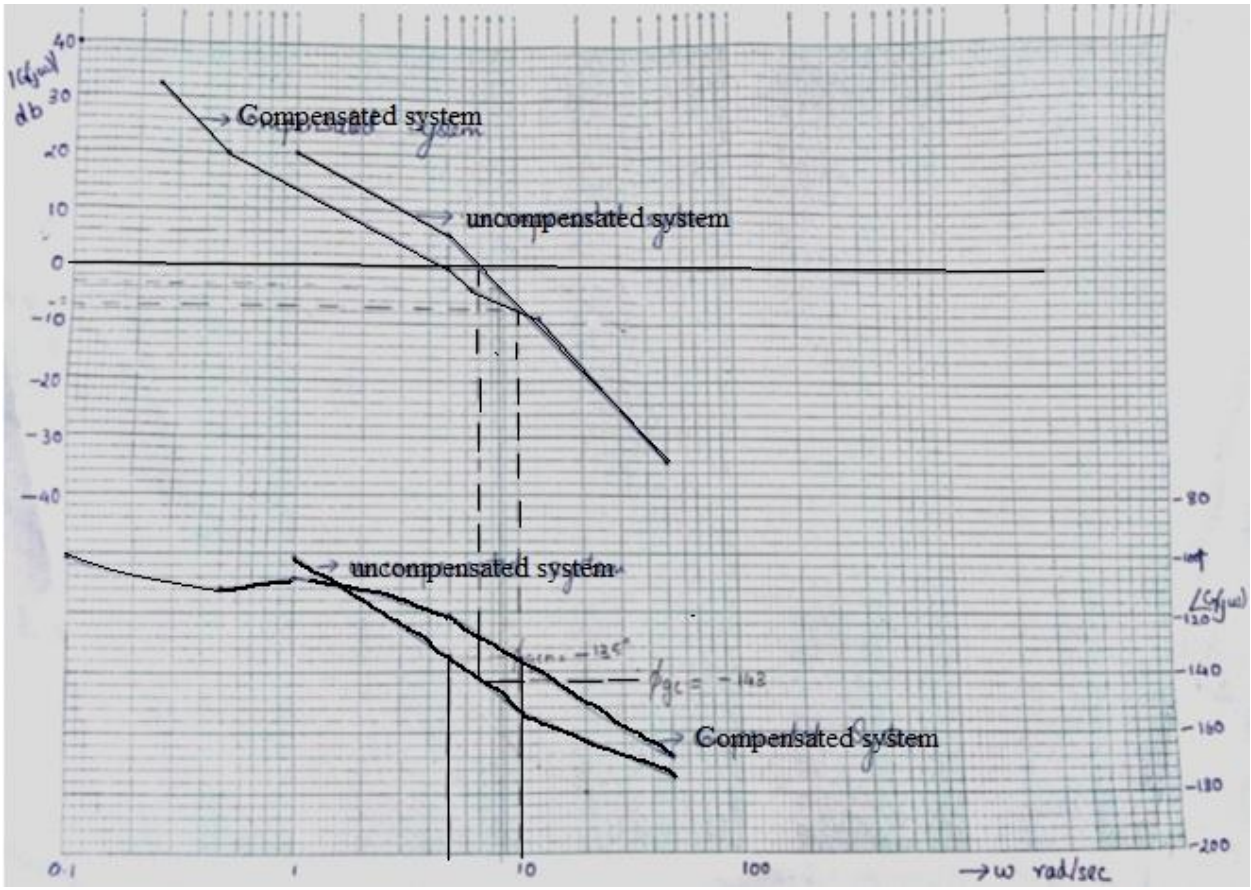
|G(jω)| db
40
30
20
10
0
-10
-20
-30
-40
Compensated system
uncompensated system
uncompensated system
Compensated system
-80
-100
∠G(jω)
-120
-140
-160
-180
-200
0.1
1
10
100
→ω rad/sec

UNIT IV STABILITY AND COMPENSATOR DESIGN

Characteristics equation – Routh Hurwitz criterion – Nyquist stability criterion- Performance criteria – Lag, lead and lag-lead networks – Lag/Lead compensator design using bode plots.

Stability:

Stability refers to stable working condition of a control system. Stability can be defined as:

i) A system is **stable**, if its output is bounded (finite) foe any bounded (finite) input.

ii) A system is **asymptotically stable**, if in absence of input, the output goes zero irrespective of initial condition.

iii) A system is **limitedly stable**, if for a bounded input signal, output has a constant amplitude oscillation then system may be stable or unstable under some limited constraints.

iv) A system is **absolutely stable**, if a system output is stable for all variations of its parameter.

v) A system output is stable for a limited range of variation of its parameter, then it is **conditionally stable**.

vi) A system is **unstable,** it for a bounded disturbing input signal, and output is infinite or oscillatory.

Bounded Input Bounded Output (BIBO):

A LTI system is said to have BIBO stability if:

1. every bounded input results in a bounded output- Influence of input
2. In absence of Input the output must tend to zero, irrespective of the initial conditions.

Location of poles in S plane for stability:

Consider a single input single output system

$$M(S) = \frac{C(S)}{R(S)} = \frac{b_o S^m + b_1 S^{m-1} + b_2 S^{m-2} + ... + b_{m-1} S^m + b_m}{a_o S^n + a_1 S^{n-1} + a_2 S^{n-2} + ... + a_{n-1} S^n + a_n}$$

$$M(S) = \frac{(S+Z_1)(S+Z_2)(S+Z_3)...(S+Z_M)}{(S+P_1)(S+P_2)(S+P_3)...(S+P_N)} \qquad ....(1)$$

The roots of characteristics equation are poles and the roots of numerator polynomial are zeros. The rots or poles may lie at origin or imaginary axis or right or left half of S-plane.

From equation (1), characteristics equation: $a_o S^n + a_1 S^{n-1} + a_2 S^{n-2} + ... + a_{n-1} S + a_n = 0$ the root of the characteristics equation determines the stability of the system. the types of roots and response is given as below

The conclusions are:

1. If the roots of the characteristics equations have negative real parts, then the system is stable.
2. If any roots of the characteristics equation have a positive real part, then the system is unstable.
3. If the characteristics equation has repeated roots in the jw axis, the system is unstable.
4. If one or more non repeated roots of the characteristics equation are on the jw axis, the system is unstable.
5. If condition (1) is satisfied, except for the presence of one or more non-repeated roots on the jw axis, the system is limitedly stable.

ROUTH-HURWITZ STABILITY CRITERION

This criterion is based on ordering the coefficients of the characteristics equation into an array, called the Routh Array $a_o S^n + a_1 S^{n-1} + a_2 S^{n-2} + ... + a_{n-1} S + a_n = 0$

Routh Array

S^n	a_o	a_2	a_4	a_6	.	.
S^{n-1}	a_1	a_3	a_5	.	.	.
S^{n-2}	b_1	b_2	b_3	.	.	.
S^{n-3}	c_1	c_2				
S^{n-4}	d_1	d_2				
.	.	.				
.	.	.				
.	.	.				
S^2	e_1	a_n				
S^1	f_1					
S^0	a_n					

The coefficient b_1, b_2… are calculated as follows:

$b_1 = (a_1 a_2 - a_0 a_3) / a_1$

$b_2 = (a_1 a_4 - a_0 a_5) / a_1$

$c_1 = (b_1 a_3 - a_1 b_2) / b_1$

Similarly the process is continued till S^0, all the elements of any row can be divided ny a positive constant during the process to simplify the computational work. Also the missing term is regarded as Zero.

The Routh stability criterion is stated as, "*For a system to be stable, it is necessary and sufficient that each term of the first column of the Routh Array of its characteristics equation be positive if $a_0>0$. If this condition is not met, the system is unstable and number of sign changes of the terms of the first column of the Routh Array corresponds to the number of roots of the characteristics equation in the right half of the S-plane.*"

EXAMPLES:

1. **Find the stability of the system with characteristics equations**

i) $S^4+8S^3+18S^2+16S+5=0$

ii) $3S^4+10S^3+5S^2+5S+2=0$

Soln:

i) The Routh Array is given by

S^4	1	18	5
S^3	8	16	0 (missing term)
S^2	$\frac{8*18-1*16}{8}=16$	$\frac{8*5-1*0}{8}=5$	
S^1	$\frac{16*16-8*5}{16}=13.5$	0	
S^0	$\frac{13.5*5-16*0}{13.5}=5$		

The elements of the first column are all positive and hence the system is **stable.**

ii) The Routh Array is given by

S^4	3	5	2
S^3	10	5	
S^3*	2	1	
S^2	$\frac{2*5-3*1}{2}=3.5$	$\frac{2*2-3*0}{2}=2$	
S^1	$\frac{3.5*1-2*2}{3.5}=-\frac{0.5}{3.5}$		
S^0	2		

*In order to simplify the computation S^3- Row is divided by 5 throughout.

The elements of the first column has both positive and negative elements, with two sign changes- representing two poles of the characteristics equation of the right half of the S-plane. and hence the system is **unstable.**

2. **The Characteristics equation of a system in difference equation form is**

$$\ddot{x} - (K+2)\dot{x} + (2K+5)x = 0$$

a) **Find the values of K for which the system is**

   i) **Stable**

   ii) **Limitedly Stable**

   iii) **Unstable**

b) **For a stable case for what value of K is the system**

   i) **Underdamped**

   ii) **Overdamped**

Soln:

Given $\ddot{x} - (K+2)\dot{x} + (2K+5)x = 0$, taking lapalce transform by assuming zero initial conditions the Characteristics equation is given by

$$S^2 - (K+2)S^1 + (2K+5) = 0$$

i) The Routh Array is given by

S^2	1	2K+5
S^1	-(K+2)	0
S^0	2K+5	0

a) i) For the system to be stable, the condition is
-(K+2)>0 & (2K+5)>0 , ie K<-2 and K>-2.5
Or -2>K>-2.5
ii) For the system to be limitedly stable, K=-2 or K=-2.5
iii) For the system to be unstable, K>-2 and K <-2.5

b) The roots of Characteristics equation is expressed as

$$S_1, S_2 = \frac{1}{2}\left\{(K+2) \pm \sqrt{[(K+2)^2 - 4(2K+5)]}\right\}$$

For critically damped case $(K+2)^2$-4(2K+5)=0 ie, K= 6.47 or -2.47. K=6.47 makes the system unstable, hence K=-2.47 is chosen.

i) For underdamped case, -2>K>-2.47

ii) For Overdamped case, -2.47>K>-2.5

Special Cases:

Case 1: When the first term in any row in Routh Array is Zero while rest of the row has at least one non zero term. Because of this, the term in the next row becomes infinite.

There are two methods to solve this problem

i) Substitute a small positive number $\hat{I}$ for the zero and proceed to evaluate the rest of the Routh Array. Then examine the signs of the first column of Routh Array by lettering $\hat{I}$ as 0

ii) Modify the original characteristics equation by replacing S by 1/Z. Apply the Routh's test on the modified equation in the term of Z. the number of Z roots with positive real parts are the same as the number of S roots with positive real parts. This method works in most but not all cases.

3. **Find the Stability of the system with characteristic equation** $S^5 + S^4 + 2S^3 + 2S^2 + 3S + 5 = 0$

Method 1:

The Routh Array is

S^5	1	2	3
S^4	1	2	5
S^3	$\frac{1*2-1*2}{1} = 0 \to \in$	-2	
S^2	$\frac{2\in+2}{\in}$	5	
S^1	$\frac{-4\in-4-5\in^2}{2\in+2} \to -2$		
S^0	5		

From the Routh array, it is seen that first element in the third row is 0. This is replaced by $\in$, a small positive number. The first element in the 4th row is now $\frac{2\in+2}{\in}$ which has a positive sign as $\in \to 0$. The first term in the fifth row is $\frac{-4\in-4-5\in^2}{2\in+2} \to -2$ as $\in \to 0$. Therefore by examining the first column it is noted that there is two sign changes and hence the system becomes unstable.

Method 2:

When S is replaced by 1/Z, the characteristics equation becomes $5Z^5 + 3Z^4 + 2Z^3 + 2Z^2 + z + 1 = 0$

The Routh Array is

z^5	5	2	1
z^4	3	2	1

z^3	-4/3	-2/3
z^2	½	1
z^1	2	
z^0	1	

The elements of the first column has both positive and negative elements, with two sign changes, hence the system is **unstable.**

Case 2: When all the elements in any row in the Routh Array are zero.

This condition indicates that there are symmetrically located roots (±real roots, ±conjugate roots or complex conjugate roots). The polynomial whose coefficient are the elements of the rows just above the row of zero is called the Auxiliary polynomial. Replace the rows of zeros with the coefficients obtained by differentiating the auxillary polynomial with respect to S.

4. **Find the Stability of the system with characteristic equation** $S^6 + 2S^5 + 8S^4 + 12S^3 + 20S^2 + 16S + 16 = 0$.

   The Routh Array is

S^6	1	8	20	16
S^5	2	12	16	
S^5 (term/2)	1	6	8	
S^4	2	12	16	
S^4	1	6	8	
S^3	0	0		

It is noted that S^3- row has all elements zero, thus considering the row above (S^4 row) to be auxiliary polynomial.

$A(S) = S^4 + 6S^2 + 8$

Differentiating with respect to S

$\frac{dA(S)}{dS} = 4S^3 + 12S$; replace the obtained coefficient in S^3- row

S^6	1	8	20	16
S^5	2	12	16	
S^5	1	6	8	
S^4	2	12	16	
S^4	1	6	8	
S^3	4	12		
S^3	1	3		
S^2	3	8		

S^1	1/3
S^0	8

Since there is no sign change in the first column after considering the auxiliary polynomial. The system is said to be **limitedly stable** because of the consideration used.

By solving the auxiliary polynomial $A(S) = S^4 + 6S^2 + 8$

The roots are S=±j√2 and S=±j2.

ROOT LOCUS TECHNIQUES

The root locus was introduced by W.R.Evans in 1948 for the analysis of control systems. The root locus technique is a powerful tool for adjusting the location of closed loop poles to achieve the desired system performance by varying one or more system parameters. It is a graphical representation in s-domain and it is symmetrical about the real axis. Because the open loop poles and zeros exist in the s-domain having the values either as real or as complex conjugate pairs.

Consider a feedback system with characteristics equation is 1+G(S)H(S)=0

Rules for Construction of Root Locus

Follow these rules for constructing a root locus.

Rule 1 − Locate the open loop poles and zeros in the 's' plane.

Rule 2 − Find the number of root locus branches.

We know that the root locus branches start at the open loop poles and end at open loop zeros. So, the number of root locus branches **N** is equal to the number of finite open loop poles **P** or the number of finite open loop zeros **Z**, whichever is greater.

Mathematically, the number of root locus branches **N** can be written as,

N=P if P≥Z

N=Z if P<Z

Rule 3 − Identify and draw the **real axis root locus branches**.

If the angle of the open loop transfer function at a point is an odd multiple of 180^0, then that point is on the root locus. If odd number of the open loop poles and zeros exist to the left side of a point on the real axis, then that point is on the root locus branch. Therefore, the branch of points which satisfies this condition is the real axis of the root locus branch.

Rule 4 − Find the centroid and the angle of asymptotes.

- If P=Z then all the root locus branches start at finite open loop poles and end at finite open loop zeros.
- If P>Z , then Z number of root locus branches start at finite open loop poles and end at finite open loop zeros and P−Z number of root locus branches start at finite open loop poles and end at infinite open loop zeros.
- If P<Z , then P number of root locus branches start at finite open loop poles and end at finite open loop zeros and Z−P number of root locus branches start at infinite open loop poles and end at finite open loop zeros.

So, some of the root locus branches approach infinity, when P≠Z. Asymptotes give the direction of these root locus branches. The intersection point of asymptotes on the real axis is known as **centroid**.

we can calculate the **centroid α** by using this formula, Real part of finite open loop ploes

$$\alpha = \frac{\sum \text{Real part of finite open loop ploes} - \sum \text{Real part of finite open loop zeros}}{\text{P - Z}}$$

The formula for the angle of **asymptotes θ** is

$$\theta = \frac{(2q+1)180^{\circ}}{\text{P - Z}}, \text{ Where q=0,1,2…,(P-Z)-1}$$

Rule 5 − Find the intersection points of root locus branches with an imaginary axis.

We can calculate the point at which the root locus branch intersects the imaginary axis and the value of **K** at that point by using the Routh array method and special **case (ii)**.

- If all elements of any row of the Routh array are zero, then the root locus branch intersects the imaginary axis and vice-versa.
- Identify the row in such a way that if we make the first element as zero, then the elements of the entire row are zero. Find the value of **K** for this combination.
- Substitute this **K** value in the auxiliary equation. You will get the intersection point of the root locus branch with an imaginary axis.

Rule 6 − Find Break-away and Break-in points.

- If there exists a real axis root locus branch between two open loop poles, then there will be a **break-away point** in between these two open loop poles.

- If there exists a real axis root locus branch between two open loop zeros, then there will be a **break-in point** in between these two open loop zeros.

Note − Break-away and break-in points exist only on the real axis root locus branches.

Follow these steps to find break-away and break-in points.

- Write K in terms of ss from the characteristic equation 1+G(s)H(s)=0.
- Differentiate K with respect to s and make it equal to zero. Substitute these values of s in the above equation.
- The values of s for which the K value is positive are the **break points**.

Rule 7 − Find the angle of departure and the angle of arrival.

- The Angle of departure and the angle of arrival can be calculated at complex conjugate open loop poles and complex conjugate open loop zeros respectively.
- The formula for the **angle of departure** ϕd is

  $\phi_d = 180^{\circ} - \phi$
- The formula for the **angle of arrival** ϕa is

  $\phi_a = 180^{\circ} + \phi$

  Where $\phi = \sum \phi_p - \sum \phi_z$

Example 1

A certain unity negative feedback control system has the following open loop Transfer function

$GH(s) = \dfrac{K}{s(s+1)(s+3)}$. Draw the root locus for $0 \le K \le \infty$

Solution:

1. The three root loci start from poles at 0,-1 and -3 where the value of K=0
2. There is no zero here and so the three loci terminate at infinity where k=infinity.
3. For the given open loop transfer function, P=3 and Z=0. Hence, N=3. There are three separate loci.
4. The asymptote of the root loci make $\theta = \dfrac{(2n+1)\pi}{(P-Z)}$ angles with real axis. Hence the angles are $\pi, \dfrac{\pi}{3} and \dfrac{5\pi}{3}$. The loci 1,2 and 3 make these angles respectively.
5. The point of interaction of the asymptotes is given by

$$x = \sum Poles\, of\ GH(s) - \sum Zeros\, of\ GH(s) = \frac{0-1-3-0}{3} = -1.33$$

6. At point A there is no root locus, because two poles are lying to the right side of point A. For even number of poles and zeros to the right side of the point there cannot be any root locus on the real axis. On the other had consider the point B. There are three poles on the right hand side of point B. This is an odd number. Hence, three is root locus. Hence, on the real axis root loci exist between s=0 and s=-1 and s=-3 and s=-infinity.
7. The characteristics equation is written as

$$F(s) = 1 + G(s) = 0$$

$$s^3 + 4s^2 + 3s + K = 0$$

Differentiating the above equation with respect to s we get,

$$3s^2 + 8s + \frac{dK}{ds} = 0$$

Put $\frac{dK}{ds} = 0$ and solving for s we get

S1=-2.23 and s2=-0.43.

The breakaway point at s_1=-2.23 is ruled out since there is no root locus there. Hence s_2=-0.43 is the breakaway point.

8. The critical value of K and the value of w at the imaginary axis where the root locus crosses from LHP to RHP is obtained from the following Routh's array which of formed from the characteristic equation.

S3	1	3
S2	4	K
S1	$\frac{12-K}{4} = 0$	
S0	K	

The critical value of K=12. The auxiliary equation is obtained from the s^2 row as

$$4s^2 + K = 0$$

Substituting s=jω and K=12, we get

$$-4\omega^2 + 12 = 0 \quad or \quad \omega = \pm\sqrt{3}$$

9. The complete root locus is shown in Fig

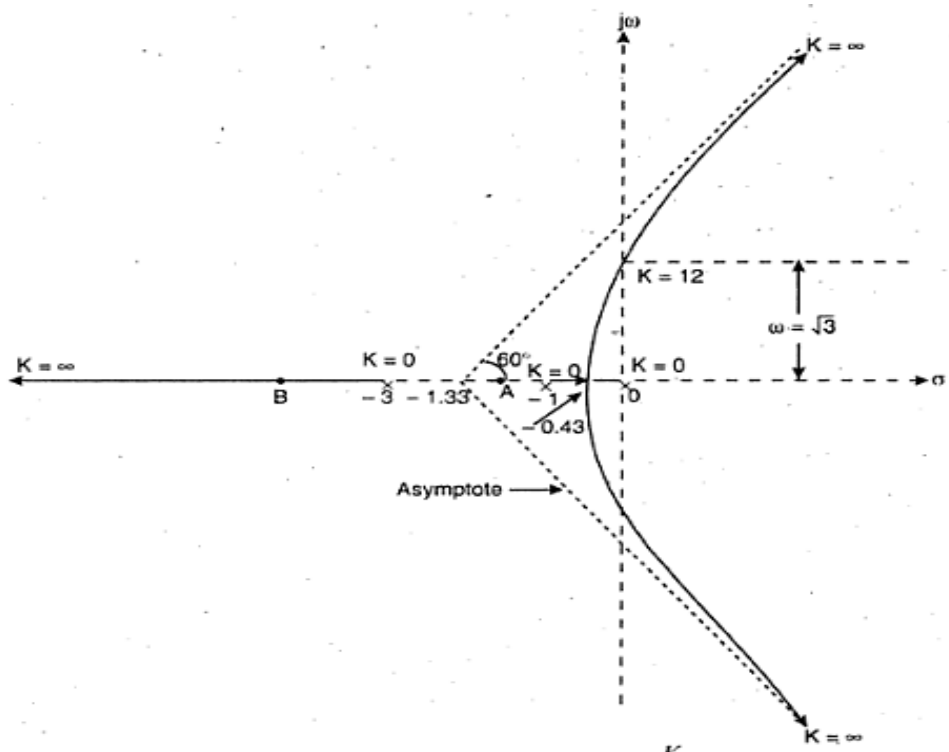

Fig. *Root Locus for* $G(s) = \dfrac{K}{s(s+1)(s+3)}$

The three poles are located as shown in Fig.

NYQUIST STABILITY CRITERIA

The Nyquist plot allows us also to predict the stability and performance of a closed-loop system by observing its open-loop behaviour. The Nyquist criterion can be used for design purposes regardless of open-loop stability (remember that the Bode design methods assume that the system is stable in open loop).

Nyquist suggested to select a single valued function F(s) as 1+G(s)H(s) where G(s)H(s) is open loop transfer function of the system

F(s)= 1+G(s)H(s)

Poles of 1+G(s)H(s)=Poles of G(s)H(s)=open loop poles

These are known to us as G(s)H(s)

But zeros of 1+G(s)H(s)=Closed loop poles of the system.

For stability, all the zeros of 1+G(s)H(s) must be in the left half of s-plane, none of the zeros should be in the right half of s-plane. Now the location of zero of 1+G(s)H(s) are unknown to us.

Now the Nyquist stability criterion can be stated as follows:

“ If the G(s)H(s) contour in the G(s)H(s) plane corresponding to Nyquist contour in the s-plane encircles the point -1+j0 in the anticlockwise direction as many times as the number of right half s-plane poles of G(s)H(s), then the closed loop system is stable.

1. **No encirclement of—1+ j0 point:** This implies that the system is stable if there are no poles of G(s)H(s) in the right half s-plane. If there are poles on right half s-plane then the system is unstable.
2. **Anticlockwise encirclements of —1 + j0 point:** In this case the system is stable if the number of anticlockwise encirclements is same as the number of poles of G(s)H(s) in the right half s-plane. If the number of anticlockwise encirclements is not equal to number of poles on right half s-plane then the system is unstable.
3. **Clockwise encirclements of the —1 + j0 point:** In this case the system is always unstable. Also in this case, if no poles of G(s)H(s) in right half s-planes then the number of clockwise encirclement is equal to number of poles of closed loop system on right half s-plane.

Example 1

Draw the Nyquist plot for the system whose open loop transfer function is

$$G(s)H(s) = \frac{K}{s(s+2)(s+10)}$$

Determine the range of K for which closed loop system is stable.

Solution:

C1-nyquist

C3 –inv of nyquist

C2

R=∞ & θ=π/2 to - π/2

C4

R=0 & θ =-π/2 to π/2

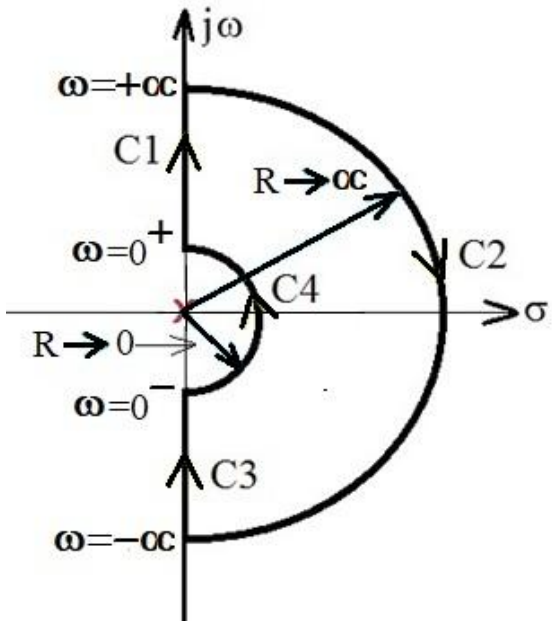

$$G(s)H(s) = \frac{K}{s(s+2)(s+10)} = \frac{0.05K}{s(1+0.5s)(1+0.1s)}$$

$$s = j\omega$$

$$G(s)H(s) = \frac{0.05K}{-0.6\omega^2 + j\omega(1-0.05\omega^2)}$$

$$At\ \ \omega = \omega_{pc},\ imag = 0, \quad \omega(1-0.05\omega^2) = 0$$

$$\omega_{pc} = 4.472\ rad/\sec$$

$$G(s)H(s) = \frac{0.05K}{-0.6\omega^2} = \frac{0.05K}{-0.6(4.472)^2}$$

$$= -0.00417\,K$$

Mapping of section C1

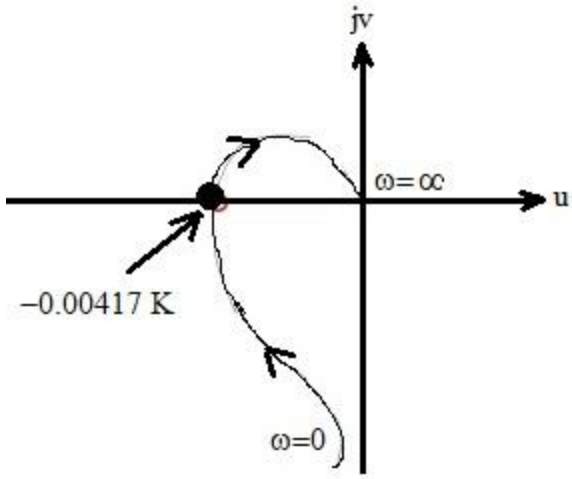

Mapping of section C2

$$s = \underset{R\to\infty}{Lt}\ \mathrm{R}\,\mathrm{e}^{j\theta} \qquad \theta = \frac{\pi}{2} \quad to \quad -\frac{\pi}{2}$$

$$G(s)H(s) = \frac{0.05K}{s(1+0.5s)(1+0.1s)} \approx \frac{0.05K}{s(0.5s)(0.1s)}$$

$$= \frac{K}{s^3} = \frac{K}{\underset{R\to\infty}{Lt}\left(\mathrm{R}\,\mathrm{e}^{j\theta}\right)^3} = 0\,\mathrm{e}^{-j3\theta}$$

$$= 0\left(-3\theta = -\frac{3\pi}{2} \quad to \quad \frac{3\pi}{2}\right)$$

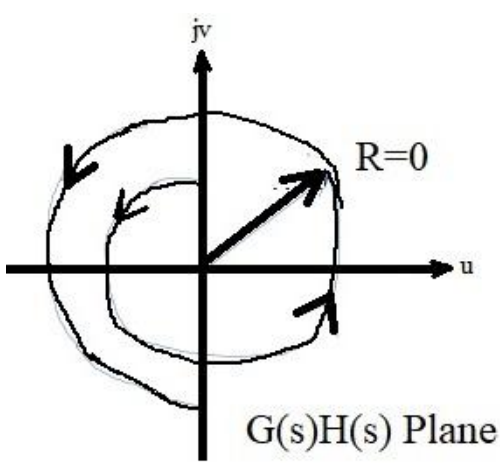

Mapping of C3 (Inverse of Nyquist)

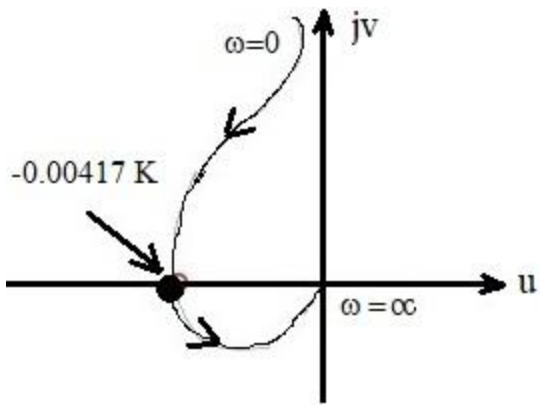

Mapping of section C4

$$s = \underset{R\to 0}{Lt}\ \mathrm{R}\,\mathrm{e}^{j\theta} \qquad \theta = -\frac{\pi}{2} \quad to \quad \frac{\pi}{2}$$

$$G(s)H(s) = \frac{0.05K}{s(1+0.5s)(1+0.1s)} \approx \frac{0.05K}{s(1)(1)}$$

$$= \frac{0.05K}{s} = \frac{K}{\underset{R\to 0}{Lt}\left(\mathrm{R}\,\mathrm{e}^{j\theta}\right)} = \infty\,\mathrm{e}^{-j\theta}$$

$$= \infty\left(-\theta = \frac{\pi}{2} \quad to \ -\frac{\pi}{2}\right)$$

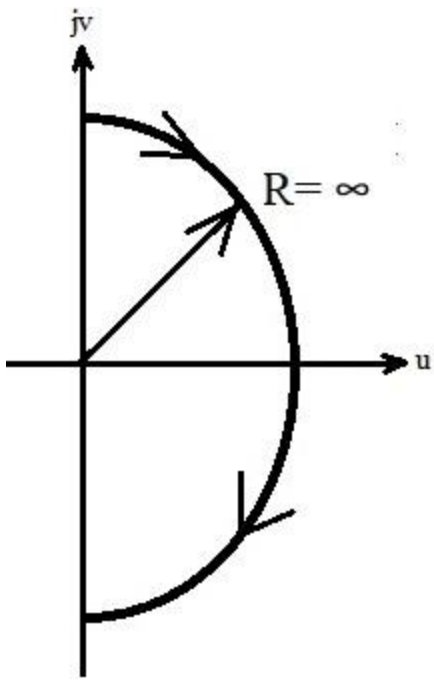

Complete Nyquist Plot

The entire Nyquist plot in G(s)H(s) plane can be obtained by combining the mapping of the individual section.

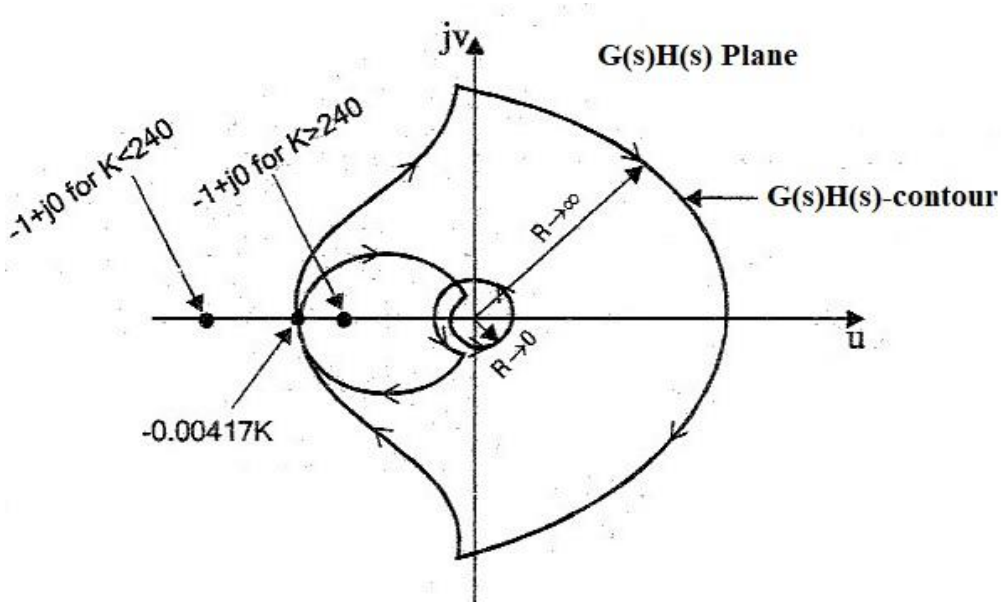

Stability Analysis

When -0.00417K=-1, the contour passes through (-1+j0) point and corresponding value of K is the limiting value of K for stability.

Limiting value of K $= \frac{1}{0.00417} = 240$

When K<240

When K is less than 240, the contour crosses real axis at a point between 0 and -1+j0. On travelling through Nyquist plot along the indicated direction it is found that the point -1+j0 is not encircled. Also the open loop transfer function has no poles on the right half of s-plane. Therefore the closed loop system is stable.

When K>240 greater than 240, the contour crosses real axis at a point between -1+j0 and -∞. On travelling through Nyquist plot along the indicated direction it is found that the point -1+j0 is encircled in clockwise direction two times.(Since there are two clockwise encirclement and no right half open loop poles, the closed loop system has two poles on right half of s-plane). Therefore the closed loop system is unstable.

Result

The value for stability is 0<K<240

Example 2

By Nyquist stability criterion determine the stability of the closed loop system, whose open loop transfer function is give by $G(s)H(s) = \frac{s+2}{(s+1)(s-1)}$. Comment on the stability of open loop and closed loop system.

Mapping of C1

$$G(s)H(s) = \frac{s+2}{(s+1)(s-1)} = \frac{2(1+0.5s)}{(1+s)(-1+s)}$$

Let s=jw

$$G(j\omega)H(j\omega) = \frac{2(1+0.5j\omega)}{(1+j\omega)(-1+j\omega)} = \frac{2\sqrt{1+0.25\omega^2}\angle\tan^{-1}(0.5\omega)}{\sqrt{1+\omega^2}\angle\tan^{-1}(\omega)\sqrt{1+\omega^2}\angle\left(180^\circ - \tan^{-1}(\omega)\right)}$$

$$G(j\omega)H(j\omega) = \frac{2\sqrt{1+0.25\omega^2}}{1+\omega^2}$$

$$\angle G(j\omega)H(j\omega) = -180 + \tan^{-1}(0.5\omega)$$

By calculating the magnitude of and phase of G(jw)H(jw) for various values of w

ω rad/sec	0	0.4	1	2	10	∞
$\lvert G(j\omega)H(j\omega)\rvert$	2	1.76	1.12	0.57	0.1	0
$\angle\lvert G(j\omega)H(j\omega)\rvert$ deg	-180	-168	-153	-135	-101	-90

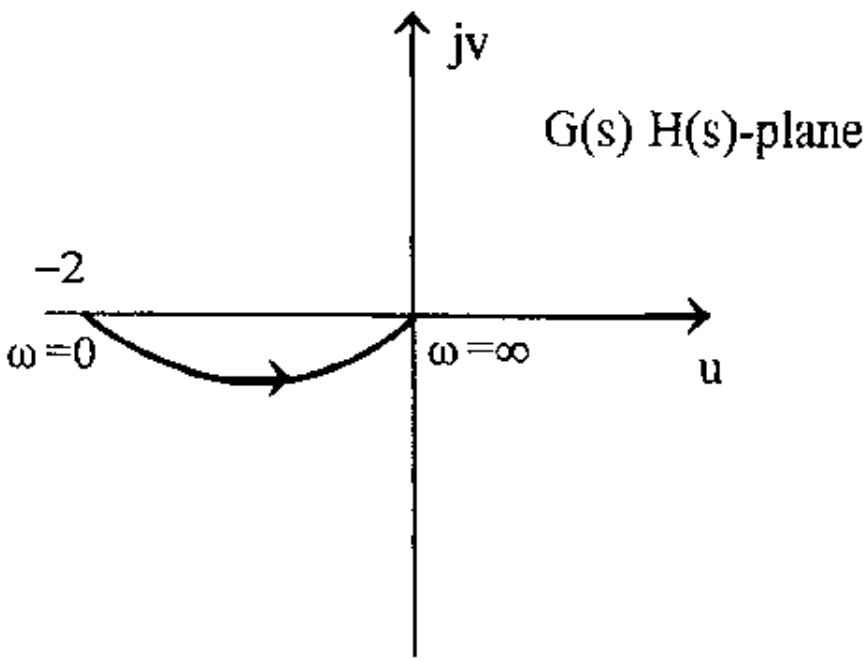

Mapping of Section C2

The mapping of section C2 from s plane to G(s)H(s) plane is obtained by letting $s = \lim_{R\to\infty} \mathrm{R}e^{j\theta}$ in G(s)H(s) and varying θ from +π/2 to –π/2.

$$G(s)H(s) = \frac{2(1+0.5s)}{(1+s)(-1+s)} \approx \frac{2\times 0.5s}{s\times s} = \frac{1}{s}$$

Let $s = \lim_{R\to\infty} \mathrm{R}e^{j\theta}$

$$G(s)H(s)\Big|_{s=\lim_{R\to\infty}\mathrm{R}e^{j\theta}} = \frac{1}{\lim_{R\to\infty}\mathrm{R}e^{j\theta}} = 0\,\mathrm{e}^{-j\theta}$$

$$when\,\theta = \frac{\pi}{2},\ G(s)H(s) = 0e^{-j\frac{\pi}{2}}$$

$$when\,\theta = -\frac{\pi}{2},\ G(s)H(s) = 0e^{j\frac{\pi}{2}}$$

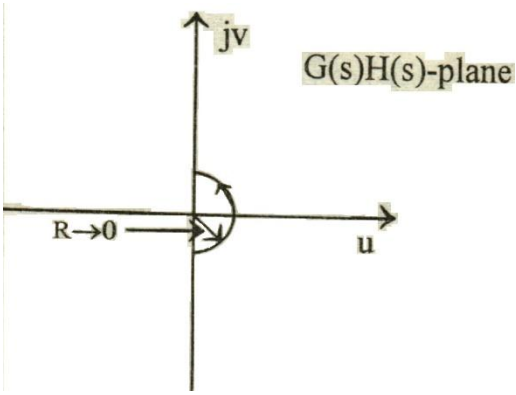

Mapping of Section C3

In section C3, ω varies from -∞ to 0. The mapping of section C3, is given by the locus of G(jω)H(jω) as w is varied from -∞ to 0.This locus is the inverse polar plot of G(jω)H(jω).

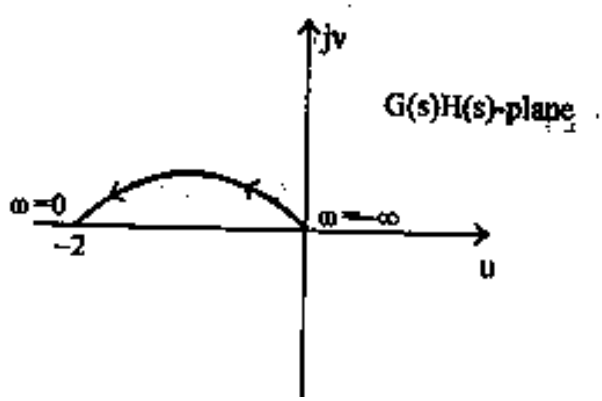

The complete Nyquist Plot is given by

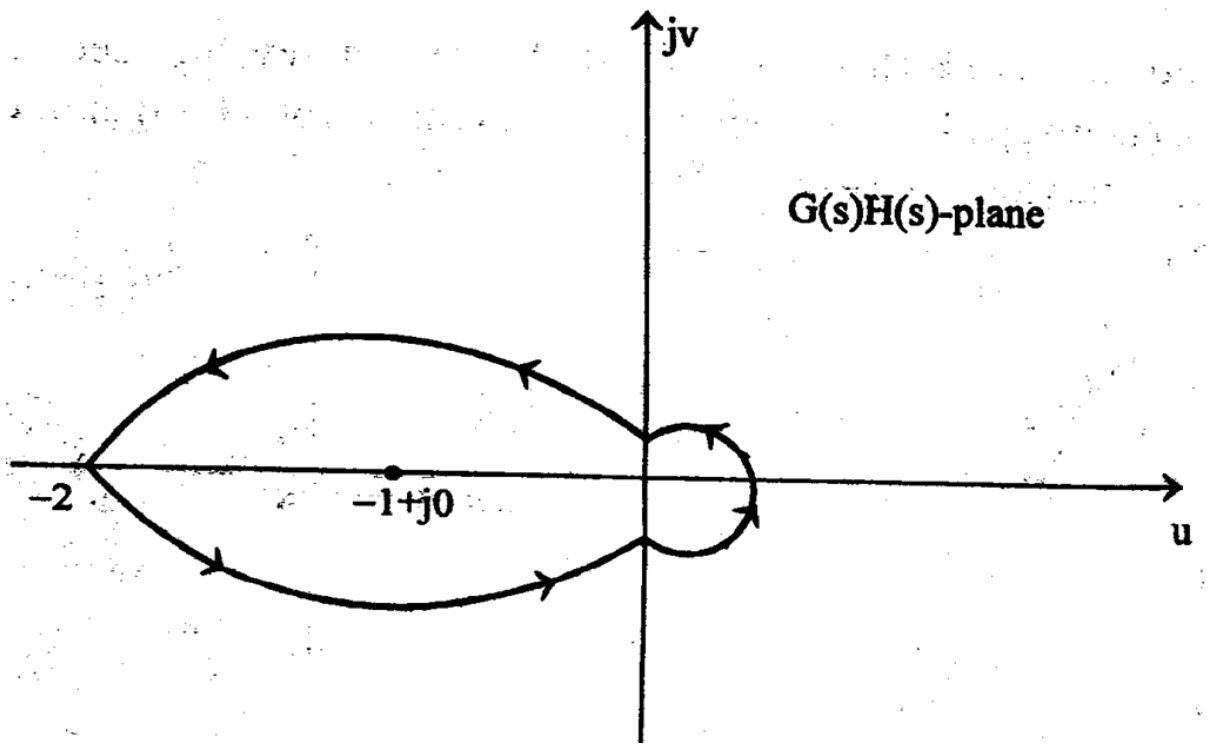

Stability Analysis

On Travelling through Nyquist contour it is observed that -1+j0 point is encircled in anticlockwise direction one time. Also the open loop transfer function has one pole at right half s-plane. Since the number of anticlockwise encirclement is equal to number of open loop poles on right half s-plane, the closed loop system is stable.

Result

1. Open loop system is unstable
2. Closed loop system is stable.

Unit V - STATE VARIABLE ANALYSIS

1. Statespace modelling of Mechanical systems
2. Statespace modelling of Electrical systems
3. Statespace into transfer function
4. Transfer function into Statespace model
5. Controllability and Oservability

EXAMPLE

Construct the state model of mechanical system shown in fig 4.3.1.

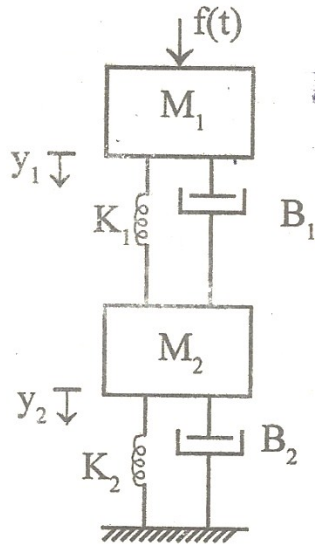

Fig 4.3.1.

SOLUTION

Free body diagram of M_1 is shown in fig 4.3.2.

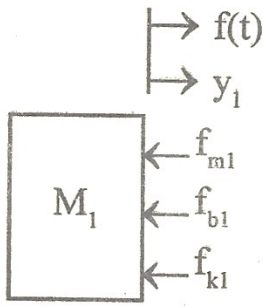

Fig 4.3.2.

$$f_{m1} = M_1 \frac{d^2y_1}{dt^2} \quad ;$$

$$f_{b1} = B_1 \frac{d}{dt}(y_1 - y_2)$$

$$f_{k1} = K_1(y_1 - y_2)$$

By Newton's second law, the force balance equation at node M_1 is,

$$f(t) = f_{m1} + f_{b1} + f_{k1}$$

$$f(t) = M_1 \frac{d^2y_1}{dt^2} + B_1 \frac{d}{dt}(y_1 - y_2) + K_1(y_1 - y_2)$$

$$f(t) = M_1 \frac{d^2y_1}{dt^2} + B_1 \frac{dy_1}{dt} - B_1 \frac{dy_2}{dt} + K_1y_1 - K_1y_2 \qquad .....(4.3.1)$$

Free body diagram of M_2 is shown in fig 4.3.3.

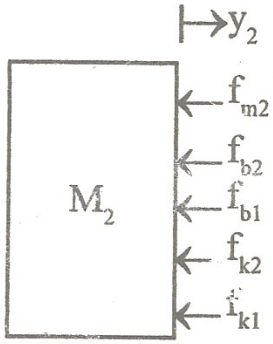

Fig 4.3.3.

$$f_{m2} = M_2 \frac{d^2y_2}{dt^2} \quad ; \quad f_{b2} = B_2 \frac{dy_2}{dt}$$

$$f_{b1} = B_1 \frac{d}{dt}(y_2 - y_1) \quad ; \quad f_{k2} = K_2y_2$$

$$f_{k1} = K_1(y_2 - y_1)$$

By Newton's second law, the force balance equation at node M_2 is,

$$f_{m2} + f_{b2} + f_{b1} + f_{k2} + f_{k1} = 0$$

$$\therefore M_2\frac{d^2y_2}{dt^2}+B_2\frac{dy_2}{dt}+B_1\frac{d}{dt}(y_2-y_1)+K_2y_2+K_1(y_2-y_1)=0$$

$$M_2\frac{d^2y_2}{dt^2}+B_2\frac{dy_2}{dt}+B_1\frac{dy_2}{dt}-B_1\frac{dy_1}{dt}+K_2y_2+K_1y_2-K_1y_1=0 \quad .....(4.3.2)$$

Let us choose four state variable x_1, x_2, x_3 and x_4. Also, let the input $f(t)=u$. The state variables are related to physical variables as follows

$$x_1=y_1\ ;\ x_2=y_2\ ;\ x_3=\frac{dy_1}{dt}\ ;\quad x_4=\frac{dy_2}{dt}\ ;\ \dot{x}_3=\frac{d^2y_1}{dt^2}\ ;\quad \dot{x}_4=\frac{d^2y_2}{dt^2}$$

On substituting $y_1=x_1$; $y_2=x_2$; $\frac{dy_1}{dt}=x_3$; $\frac{dy_2}{dt}=x_4$; $\frac{d^2y_1}{dt^2}=\dot{x}_3$ and $f(t)=u$ in equation (4.3.1) we get,

$$u=M_1\dot{x}_3+B_1x_3-B_1x_4+K_1x_1-K_1x_2$$

$$M_1\dot{x}_3=-B_1x_3+B_1x_4-K_1x_1+K_1x_2+u$$

$$\therefore \dot{x}_3=-\frac{K_1}{M_1}x_1+\frac{K_1}{M_1}x_2-\frac{B_1}{M_1}x_3+\frac{B_1}{M_1}x_4+\frac{1}{M_1}u \quad .....(4.3.3)$$

On substituting $y_1=x_1$; $y_2=x_2$; $\frac{dy_1}{dt}=x_3$; $\frac{dy_2}{dt}=x_4$ and $\frac{d^2y_2}{dt}=\dot{x}_4$ in equation (4.3.2) we get,

$$M_2\dot{x}_4+B_2x_4+B_1x_4-B_1x_3+K_1x_2+K_2x_2-K_1x_1=0$$

$$\therefore M_2\dot{x}_4=-B_2x_4-B_1x_4+B_1x_3-K_2x_2-K_1x_2+K_1x_1$$

$$=-(B_2+B_1)\,x_4+B_1x_3-(K_2+K_1)x_2+K_1x_1$$

$$\therefore \dot{x}_4=\frac{K_1}{M_2}x_1-\frac{(K_1+K_2)}{M_2}x_2+\frac{B_1}{M_2}x_3-\frac{(B_1+B_2)}{M_2}x_4 \quad .....(4.3.4)$$

The state variable $x_1=y_1$.

On differentiating $x_1=y_1$ with respect to t we get, $\frac{dx_1}{dt}=\frac{dy_1}{dt}$

Let $\frac{dx_1}{dt}=\dot{x}_1$ and $\frac{dy_1}{dt}=x_3$; $\therefore \dot{x}_1=x_3$ .....(4.3.5)

The state variable, $x_2=y_2$.

On differentiating $x_2=y_2$ with respect to t we get, $\frac{dx_2}{dt}=\frac{dy_2}{dt}$

Let $\frac{dx_2}{dt} = \dot{x}_2$ and $\frac{dy_2}{dt} = x_4$; $\therefore \dot{x}_2 = x_4$ .....(4.3.6)

The equations (4.3.3) to (4.3.6) are state equations of the mechanical system. Hence the state equations of the mechanical system are,

$$\dot{x}_1 = x_3$$
$$\dot{x}_2 = x_4$$
$$\dot{x}_3 = -\frac{K_1}{M_1}x_1 + \frac{K_1}{M_1}x_2 - \frac{B_1}{M_1}x_3 + \frac{B_1}{M_1}x_4 + \frac{1}{M_1}u.$$
$$\dot{x}_4 = \frac{K_1}{M_2}x_1 - \frac{(K_1+K_2)}{M_2}x_2 + \frac{B_1}{M_2}x_3 - \frac{(B_1+B_2)}{M_2}x_4$$

On arranging the state equations in the matrix form, we get,

$$\begin{bmatrix} \dot{x}_1 \\ \dot{x}_2 \\ \dot{x}_3 \\ \dot{x}_4 \end{bmatrix} = \begin{bmatrix} 0 & 0 & 1 & 0 \\ 0 & 0 & 0 & 1 \\ -\frac{K_1}{M_1} & \frac{K_1}{M_1} & -\frac{B_1}{M_1} & \frac{B_1}{M_1} \\ \frac{K_1}{M_2} & -\frac{(K_1+K_2)}{M_2} & \frac{B_1}{M_2} & \frac{-(B_1+B_2)}{M_2} \end{bmatrix} \begin{bmatrix} x_1 \\ x_2 \\ x_3 \\ x_4 \end{bmatrix} + \begin{bmatrix} 0 \\ 0 \\ \frac{1}{M_1} \\ 0 \end{bmatrix} [u]$$

.....(4.3.7)

Let the displacements y_1 and y_2 be the outputs of the system.

$\therefore y_1 = x_1$ and $y_2 = x_2$.

The output equation in matrix form is given by,

$$\begin{bmatrix} y_1 \\ y_2 \end{bmatrix} = \begin{bmatrix} 1 & 0 & 0 & 0 \\ 0 & 1 & 0 & 0 \end{bmatrix} \begin{bmatrix} x_1 \\ x_2 \\ x_3 \\ x_4 \end{bmatrix}$$

.....(4.3.8)

The state equation [equ (4.3.7)] and the output equation [equ (4.3.8)] together called state model of the system.

EXAMPLE

Obtain the state model of the mechanical system shown in fig 4.4.1 by choosing a minimum of three state variables.

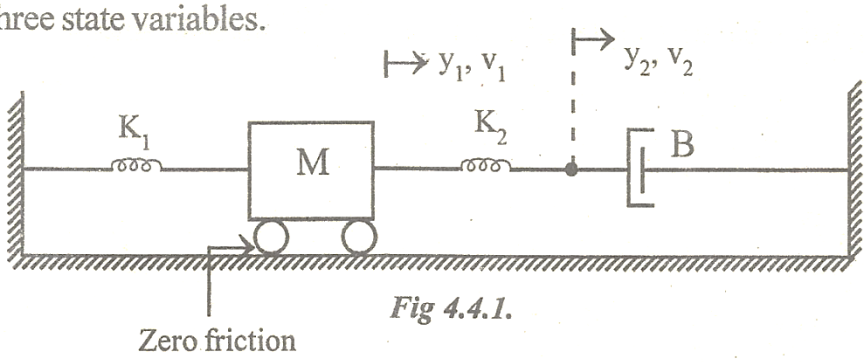

Fig 4.4.1.

SOLUTION

Let the three state variables be x_1, x_2 and x_3 and they are related to physical variables as shown below.

$$x_1 = y_1 \; ; \quad x_2 = y_2 \; ; \qquad x_3 = \frac{dy_1}{dt} = v_1 .$$

Free body diagram of mass M is shown in fig 4.4.2.

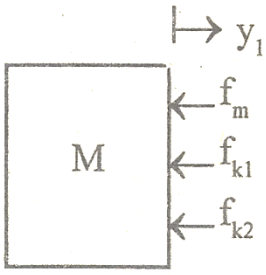

Fig 4.4.2.

$$f_m = M\frac{d^2y_1}{dt^2} \quad ; \quad f_{k1} = K_1 y_1 \quad ; \quad f_{k2} = K_2(y_1 - y_2)$$

By Newton's second law, the force balance equation at node M is,

$$f_m + f_{k1} + f_{k2} = 0$$

$$M\frac{d^2y_1}{dt^2} + K_1 y_1 + K_2(y_1 - y_2) = 0$$

$$M\frac{d^2y_1}{dt^2} + K_1 y_1 + K_2 y_1 - K_2 y_2 = 0 \qquad .....(4.4.1)$$

Put $\dfrac{d^2y_1}{dt^2} = \dot{x}_3$; $y_1 = x_1$, $y_2 = x_2$ in equ(4.4.1)

$$M\dot{x}_3 + K_1 x_1 + K_2 x_1 - K_2 x_2 = 0$$

$$M\dot{x}_3 + (K_1 + K_2)\, x_1 - K_2 x_3 = 0$$

$$\dot{x}_3 = -\frac{K_1 + K_2}{M} x_1 + \frac{K_2}{M} x_3 \qquad .....(4.4.2)$$

The freebody diagram of node 2 (meeting point of K_2 and B) is shown in fig (4.4.3).

$$f_b = B\frac{dy_2}{dt} \; ; \; f_{k2} = K_2(y_2 - y_1)$$

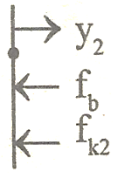

Fig 4.4.3.

Writing force balance equation at the meeting point of K_2 and B we get,

$$f_b + f_{k2} = 0$$

$$B\frac{dy_2}{dt} + K_2(y_2 - y_1) = 0$$

$$\therefore \frac{dy_2}{dt} = \frac{K_2}{B}y_1 - \frac{K_2}{B}y_2$$

Put $\frac{dy_2}{dt} = \dot{x}_2$, $y_1 = x_1$ and $y_2 = x_2$,

$$\therefore \dot{x}_2 = \frac{K_2}{B}x_1 - \frac{K_2}{B}x_2 \qquad .....(4.4.3)$$

The state variable, $x_1 = y_1$. On differentiating this expression with respect to t we get.

$$\frac{dx_1}{dt} = \frac{dy_1}{dt}$$

$$\text{Let } \frac{dx_1}{dt} = \dot{x}_1 \quad \text{and} \quad \frac{dy_1}{dt} = x_3 \quad ; \quad \therefore \dot{x}_1 = x_3 \qquad .....(4.4.4)$$

The state equations are given by equations (4.4.4), (4.4.3) and (4.4.2).

$$\dot{x}_1 = x_3$$

$$\dot{x}_2 = \frac{K_2}{B}x_1 - \frac{K_2}{B}x_2$$

$$\dot{x}_3 = -\frac{K_1 + K_2}{M}x_1 + \frac{K_2}{M}x_3$$

$$\begin{bmatrix} y_1 \\ y_2 \end{bmatrix} = \begin{bmatrix} 1 & 0 \\ 0 & 1 \end{bmatrix} \begin{bmatrix} x_1 \\ x_2 \end{bmatrix}$$

On arranging the state equations in the matrix form,

$$\begin{bmatrix} \dot{x}_1 \\ \dot{x}_2 \\ \dot{x}_3 \end{bmatrix} = \begin{bmatrix} 0 & 0 & 1 \\ \frac{K_2}{B} & -\frac{K_2}{B} & 0 \\ -\frac{K_1 + K_2}{M} & 0 & \frac{K_2}{M} \end{bmatrix} \begin{bmatrix} x_1 \\ x_2 \\ x_3 \end{bmatrix} \qquad .....(4.4.5)$$

If the desired outputs are y_1 and y_2, then $y_1 = x_1$ and $y_2 = x_2$

EXAMPLE

Obtain the state model of the electrical network shown in fig 4.1.1 by choosing minimal number of state variables.

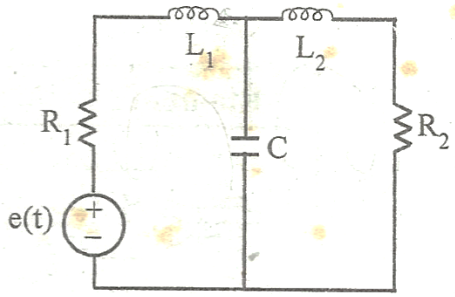

Fig 4.1.1.

SOLUTION

Let us choose the current through the inductances i_1, i_2 and voltage across the capacitor v_c as state variables. The assumed directions of currents and polarity of the voltage are shown in fig 4.1.2.

[***Note** : The best choice of state variables in electrical network are currents and voltages in energy storage elements*].

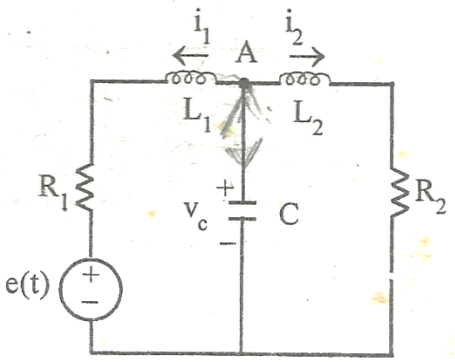

Fig 4.1.2.

Let the three state variables x_1, x_2 and x_3 be related to physical quantities as shown below.

$x_1 = i_1 =$ Current through L_1
$x_2 = i_2 =$ Current through L_2
$x_3 = v_c =$ Voltage across capacitor.

At node A, by Kirchoff's current law *(refer fig 4.1.3.)*,

$$i_1 + i_2 + C\frac{dv_c}{dt} = 0 \qquad .....(4.1.1)$$

On substituting the state variables for physical variables in equ (4.1.1) we get,

(i.e., $i_1 = x_1$, $i_2 = x_2$ and $\frac{dv_c}{dt} = \dot{x}_3$)

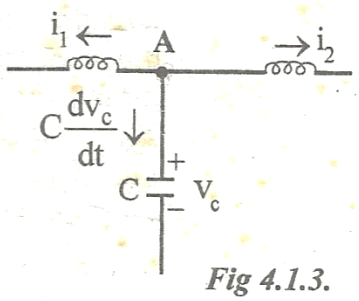

Fig 4.1.3.

$$x_1 + x_2 + C\dot{x}_3 = 0$$

$$C\dot{x}_3 = -x_1 - x_2$$

$$\dot{x}_3 = -\frac{1}{C}x_1 - \frac{1}{C}x_2 \qquad .....(4.1.2)$$

By Kirchoff's voltage law in the closed path shown in fig 4.1.4 we get,

$$e(t) + i_1R_1 + L_1\frac{di_1}{dt} = v_c \qquad .....(4.1.3)$$

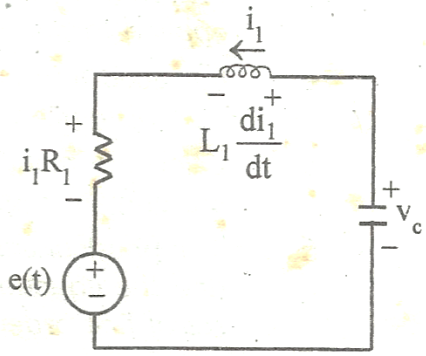

Fig 4.1.4.

On substituting the state variables for physical variables in equ (4.1.3) we get,

(i.e., $i_1 = x_1$, $\frac{di_1}{dt} = \dot{x}_1$ and $v_c = x_3$)

$$e(t) + x_1R_1 + L_1\dot{x}_1 = x_3$$

Also, let u(t) = e(t) = input to the system

$$\therefore u + x_1R_1 + L_1\dot{x}_1 = x_3$$

$$L_1\dot{x}_1 = x_3 - x_1R_1 - u$$

$$\dot{x}_1 = -\frac{R_1}{L_1}x_1 + \frac{1}{L_1}x_3 - \frac{1}{L_1}u \qquad .....(4.1.4)$$

By Kirchoff's voltage law in the closed path shown in fig 4.1.5 we get,

$$v_c = L_2\frac{di_2}{dt} + i_2R_2 \qquad .....(4.1.5)$$

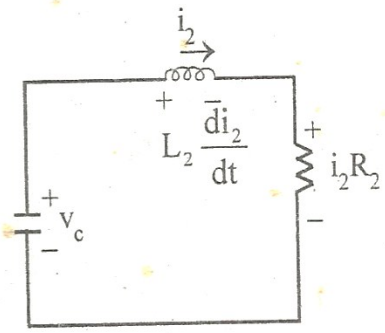

Fig 4.1.5.

On substituting the state variables for physical variables in equ (4.1.5) we get,

(i.e., $i_2 = x_2$, $\frac{di_2}{dt} = \dot{x}_2$ and $v_c = x_3$)

$$x_3 = L_2\dot{x}_2 + x_2R_2$$

$$\therefore L_2\dot{x}_2 = -x_2R_2 + x_3$$

$$\dot{x}_2 = -\frac{R_2}{L_2}x_2 + \frac{1}{L_2}x_3 \qquad .....(4.1.6)$$

The equations (4.1.2), (4.1.4) and (4.1.6.) are the state equations of the system. Hence the state equations of the system are,

$$\dot{x}_1 = -\frac{R_1}{L_1}x_1 + \frac{1}{L_1}x_3 - \frac{1}{L_1}u$$

$$\dot{x}_2 = -\frac{R_2}{L_2}x_2 + \frac{1}{L_2}x_3$$

$$\dot{x}_3 = -\frac{1}{C}x_1 - \frac{1}{C}x_2$$

On arranging the state equations in the matrix form we get,

$$\begin{bmatrix}\dot{x}_1\\ \dot{x}_2\\ \dot{x}_3\end{bmatrix} = \begin{bmatrix}-\frac{R_1}{L_1} & 0 & \frac{1}{L_1}\\ 0 & -\frac{R_2}{L_2} & \frac{1}{L_2}\\ -\frac{1}{C} & -\frac{1}{C} & 0\end{bmatrix}\begin{bmatrix}x_1\\ x_2\\ x_3\end{bmatrix} + \begin{bmatrix}-\frac{1}{L_1}\\ 0\\ 0\end{bmatrix}[u] \qquad \text{State equation .....(4.1.7)}$$

Let us choose the voltage across the resistances as output variables and the output variables are denoted by y_1 and y_2.

$$\therefore y_1 = i_1 R_1 \qquad .....(4.1.8)$$

$$\text{and} \quad y_2 = i_2 R_2 \qquad .....(4.1.9)$$

On substituting the state variables in equations (4.1.8) and (4.1.9) we get, (i.e., $i_1 = x_1$ and $i_2 = x_2$)

$$y_1 = x_1 R_1 \quad ; \quad y_2 = x_2 R_2$$

On arranging the above equations in the matrix form we get

$$\begin{bmatrix} y_1 \\ y_2 \end{bmatrix} = \begin{bmatrix} R_1 & 0 \\ 0 & R_2 \end{bmatrix} \begin{bmatrix} x_1 \\ x_2 \end{bmatrix} \quad \text{output equation} \qquad .....(4.1.10)$$

The state equation [equ (4.1.7)] and output equation [equ (4.1.10)] together constitute the state model of the system.

EXAMPLE

Obtain the state model of the electrical network shown in fig 4.2.1. by choosing $v_1(t)$ and $v_2(t)$ as state variables.

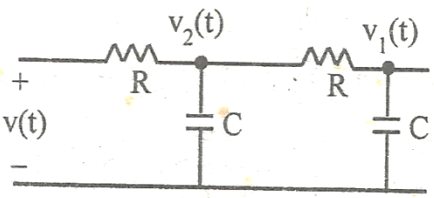

Fig 4.2.1.

SOLUTION

Connect a voltage source at the input as shown in fig 4.2.2.

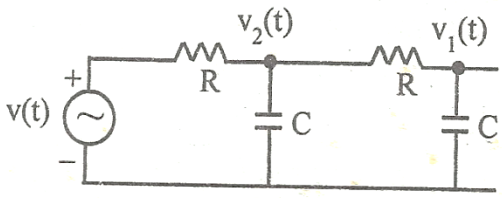

Fig 4.2.2.

Convert the voltage source to current source as shown in fig 4.2.3.

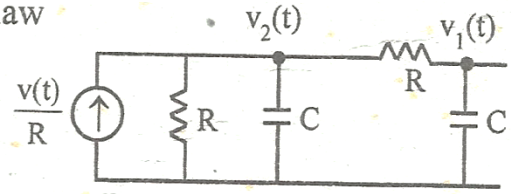

Fig 4.2.3.

At node 1, by Kirchoff's current law we can write *(refer fig 4.2.4)*

$$\frac{v_1 - v_2}{R} + C\frac{dv_1}{dt} = 0 \qquad .....(4.2.1)$$

At node 2, by Kirchoff's current law, we can write *(Refer fig 4.2.5)*

$$\frac{v_2 - v_1}{R} + \frac{v_2}{R} + C\frac{dv_2}{dt} = \frac{v(t)}{R} \qquad .....(4.2.2)$$

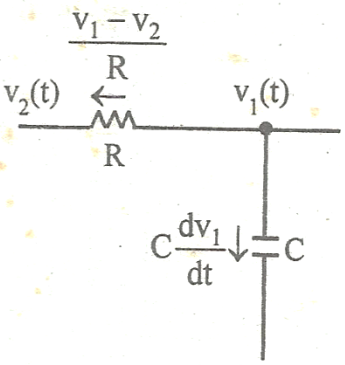

Fig 4.2.4

Let the state variables be x_1 and x_2 and they are related to physical variable as shown below.

$$v_1 = x_1 \text{ and } v_2 = x_2$$

Also, Let $v(t) = u =$ input.

On substituting the state variables in equations (4.2.1) and (4.2.2) we get,

$$\frac{x_1 - x_2}{R} + C\frac{dx_1}{dt} = 0 \qquad .....(4.2.3)$$

$$\frac{x_2 - x_1}{R} + \frac{x_2}{R} + C\frac{dx_2}{dt} = \frac{u}{R} \qquad .....(4.2.4)$$

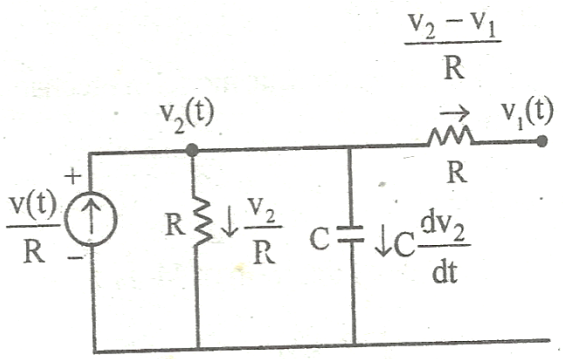

Fig 4.2.5

From equation (4.2.3) we get, $\frac{x_1}{R} - \frac{x_2}{R} + C\dot{x}_1 = 0$

$$\therefore C\dot{x}_1 = -\frac{x_1}{R} + \frac{x_2}{R}$$

$$\dot{x}_1 = -\frac{1}{RC}x_1 + \frac{1}{RC}x_2 \qquad .....(4.2.5)$$

From equation (4.2.4) we get, $\frac{x_2}{R} - \frac{x_1}{R} + \frac{x_2}{R} + C\dot{x}_2 = \frac{u}{R}$

$$\therefore C\dot{x}_2 = \frac{x_1}{R} - \frac{x_2}{R} - \frac{x_2}{R} + \frac{u}{R}$$

$$\dot{x}_2 = \frac{1}{RC}x_1 - \frac{2}{RC}x_2 + \frac{1}{RC}u \qquad .....(4.2.6)$$

The equation (4.2.5) and (4.2.6) are state equations of the system. Hence the state equations of the system are

$$\dot{x}_1 = -\frac{1}{RC}x_1 + \frac{1}{RC}x_2$$

$$\dot{x}_2 = \frac{1}{RC}x_1 - \frac{2}{RC}x_2 + \frac{1}{RC}u$$

On arranging the state equations in the matrix form,

$$\begin{bmatrix} \dot{x}_1 \\ \dot{x}_2 \end{bmatrix} = \begin{bmatrix} -\frac{1}{RC} & \frac{1}{RC} \\ \frac{1}{RC} & \frac{-2}{RC} \end{bmatrix} \begin{bmatrix} x_1 \\ x_2 \end{bmatrix} + \begin{bmatrix} 0 \\ \frac{1}{RC} \end{bmatrix} \begin{bmatrix} u \end{bmatrix} \qquad .....(4.2.7)$$

The output, $y = v_1(t) = x_1$

$$\therefore \text{The output equation is} \quad y = \begin{bmatrix} 1 & 0 \end{bmatrix} \begin{bmatrix} x_1 \\ x_2 \end{bmatrix} \qquad .....(4.2.8)$$

The state equation [equ (4.2.7)] and output equation [equ (4.2.8)] together constitute the state model of the system.

EXAMPLE

Construct a state model for a system characterized by the differential equation,

$$\frac{d^3y}{dt^3} + 6\frac{d^2y}{dt^2} + 11\frac{dy}{dt} + 6y + u = 0.$$

Give the block diagram representation of the state model.

SOLUTION

Let us choose y and their derivatives as state variables. The system is governed by third order differential equation and so the number of state variables are three.

The state variables x_1, x_2 and x_3 are related to phase variables as follows

$$x_1 = y$$

$$x_2 = \frac{dy}{dt} = \dot{x}_1$$

$$x_3 = \frac{d^2y}{dt^2} = \dot{x}_2$$

Put $y = x_1$, $\frac{dy}{dt} = x_2$ and $\frac{d^2y}{dt^2} = x_3$ and $\frac{d^3y}{dt^3} = \dot{x}_3$ in the given equation,

$$\therefore \dot{x}_3 + 6x_3 + 11x_2 + 6x_1 + u = 0$$

or $\quad \dot{x}_3 = -6x_1 - 11x_2 - 6x_3 - u.$

The state equations are

$$\dot{x}_1 = x_2$$

$$\dot{x}_2 = x_3$$

$$\dot{x}_3 = -6x_1 - 11x_2 - 6x_3 - u$$

On arranging the state equations in the matrix form we get,

$$\begin{bmatrix} \dot{x}_1 \\ \dot{x}_2 \\ \dot{x}_3 \end{bmatrix} = \begin{bmatrix} 0 & 1 & 0 \\ 0 & 0 & 1 \\ -6 & -11 & -6 \end{bmatrix} \begin{bmatrix} x_1 \\ x_2 \\ x_3 \end{bmatrix} + \begin{bmatrix} 0 \\ 0 \\ -1 \end{bmatrix} [u]$$

Here, y = output

But, $\quad y = x_1$

$\therefore$ The output equation is, $y = [1 \quad 0 \quad 0] \begin{bmatrix} x_1 \\ x_2 \\ x_3 \end{bmatrix}$

The state equation and output equation, constitutes the state model of the system.

EXAMPLE 4.10

Obtain the state model of the system whose transfer function is given as,

$$\frac{Y(s)}{U(s)} = \frac{10}{s^3 + 4s^2 + 2s + 1}$$

SOLUTION

Given that, $$\frac{Y(s)}{U(s)} = \frac{10}{s^3 + 4s^2 + 2s + 1} \qquad .....(4.10.1)$$

On cross multiplying the equ (4.10.1) we get,

$$Y(s)\left[s^3 + 4s^2 + 2s + 1\right] = 10\,U(s)$$

$$s^3Y(s) + 4s^2Y(s) + 2s\,Y(s) + Y(s) = 10\,U(s) \qquad .....(4.10.2)$$

On taking inverse laplace transform of equ (4.10.2) we get,

$$\dddot{y} + 4\,\ddot{y} + 2\,\dot{y} + y = 10\,u. \qquad .....(4.10.3)$$

Let us define state variables as follows,

$$x_1 = y \quad ; \quad x_2 = \dot{y} \quad ; \quad x_3 = \ddot{y}$$

Put $\dddot{y} = \dot{x}_3$; $\ddot{y} = x_3$; $\dot{y} = x_2$ and $y = x_1$ in the equation (4.10.3)

$$\therefore \dot{x}_3 + 4x_3 + 2x_2 + x_1 = 10u$$

$$\text{or } \dot{x}_3 = -x_1 - 2x_2 - 4x_3 + 10u.$$

The state equations are

$$\dot{x}_1 = x_2 \quad ; \quad \dot{x}_2 = x_3 \quad ; \quad \dot{x}_3 = -x_1 - 2x_2 - 4x_3 + 10u.$$

The output equation is $y = x_1$

The state model in the matrix form is,

$$\begin{bmatrix} \dot{x}_1 \\ \dot{x}_2 \\ \dot{x}_3 \end{bmatrix} = \begin{bmatrix} 0 & 1 & 0 \\ 0 & 0 & 1 \\ -1 & -2 & -4 \end{bmatrix} \begin{bmatrix} x_1 \\ x_2 \\ x_3 \end{bmatrix} + \begin{bmatrix} 0 \\ 0 \\ 10 \end{bmatrix} [u]$$

$$y = \begin{bmatrix} 1 & 0 & 0 \end{bmatrix} \begin{bmatrix} x_1 \\ x_2 \\ x_3 \end{bmatrix}$$

Statespace model into transfer function model

1. The state space representation of a system is given below:

$$\begin{pmatrix} \boldsymbol{X_1} \\ \boldsymbol{X_2} \\ \boldsymbol{X_3} \end{pmatrix} = \begin{pmatrix} \mathbf{-2} & \mathbf{1} & \mathbf{0} \\ \mathbf{0} & \mathbf{-3} & \mathbf{1} \\ \mathbf{-3} & \mathbf{-4} & \mathbf{-5} \end{pmatrix} \begin{pmatrix} \boldsymbol{x_1} \\ \boldsymbol{x_2} \\ \boldsymbol{x_3} \end{pmatrix} + \begin{pmatrix} \mathbf{0} \\ \mathbf{0} \\ \mathbf{1} \end{pmatrix} \boldsymbol{u} \ ; \ \boldsymbol{y} = (\mathbf{0\ 1\ 0}) \begin{pmatrix} \boldsymbol{x_1} \\ \boldsymbol{x_2} \\ \boldsymbol{x_3} \end{pmatrix}$$

Obtain the transfer function.

Solution

$$A = \begin{pmatrix} -2 & 1 & 0 \\ 0 & -3 & 1 \\ -3 & -4 & -5 \end{pmatrix} ; B = \begin{pmatrix} 0 \\ 0 \\ 1 \end{pmatrix} \ ; \ C = (0\ 1\ 0)$$

Transfer function = $\frac{Y(s)}{U(s)} = C(SI - A)^{-1}B + D$

$$(SI - A) = \begin{pmatrix} s & 0 & 0 \\ 0 & s & 0 \\ 0 & 0 & s \end{pmatrix} - \begin{pmatrix} -2 & 1 & 0 \\ 0 & -3 & 1 \\ -3 & -4 & -5 \end{pmatrix} = \begin{pmatrix} s+2 & -1 & 0 \\ 0 & s+3 & -1 \\ 3 & 4 & s+5 \end{pmatrix}$$

$$(SI - A)^{-1} = \frac{Adj\ (sI - A)}{\det(sI - A)}$$

$$det(sI - A) = \begin{vmatrix} s+2 & -1 & 0 \\ 0 & s+3 & -1 \\ 3 & 4 & s+5 \end{vmatrix}$$

$$= (s+2)\{(s+3)(s+5) - (-4)\} - 1\{0(s+5) - (-3)\} + 0\{0 - 3(s+3)$$

$$= (s+2)(s^2 + 8s + 19) - 3)$$

$$= s^3 + 10s^2 + 35s + 41$$

$$Adj\ (sI - A) = (cofactor\ (sI - A))^T$$

$$= \begin{pmatrix} +\begin{vmatrix} (s+3) & -1 \\ 4 & (s+5) \end{vmatrix} & -\begin{vmatrix} 0 & -1 \\ 3 & (s+5) \end{vmatrix} & +\begin{vmatrix} 0 & (s+3 \\ 3 & 4 \end{vmatrix} \\ -\begin{vmatrix} -1 & 0 \\ 4 & (s+5 \end{vmatrix} & +\begin{vmatrix} (s+2) & 0 \\ 3 & (s+5) \end{vmatrix} & -\begin{vmatrix} (s+2) & -1 \\ 3 & 4 \end{vmatrix} \\ +\begin{vmatrix} -1 & 0 \\ (s+3) & -1 \end{vmatrix} & -\begin{vmatrix} (s+2) & 0 \\ 0 & -1 \end{vmatrix} & +\begin{vmatrix} (s+2) & -1 \\ 0 & (s+3) \end{vmatrix} \end{pmatrix}^T$$

$$= \begin{pmatrix} (s^2 + 8s + 19) & 3 & (3s + 9) \\ (s+5) & (s^2 + 7s + 10) & -(4s + 11) \\ 1 & (s+2) & (s^2 + 5s + 6) \end{pmatrix}^T$$

$$= \begin{pmatrix} (s^2 + 8s + 19) & (s+5) & 1 \\ 3 & (s^2 + 7s + 10) & (s+2) \\ (3s + 9) & -(4s + 11) & (s^2 + 5s + 6) \end{pmatrix}$$

$$(SI-A)^{-1} = \frac{Adj\,(sI-A)}{\det(sI-A)}$$

$$= \frac{1}{s^3+10s^2+35s+41}\begin{pmatrix}(s^2+8s+19) & (s+5) & 1\\ 3 & (s^2+7s+10) & (s+2)\\ (3s+9) & -(4s+11) & (s^2+5s+6)\end{pmatrix}$$

$C(SI-A)^{-1}$

$$= (0 \quad 1 \quad 0)\,\frac{1}{s^3+10s^2+35s+41}\begin{pmatrix}(s^2+8s+19) & (s+5) & 1\\ 3 & (s^2+7s+10) & (s+2)\\ (3s+9) & -(4s+11) & (s^2+5s+6)\end{pmatrix}$$

$$= \frac{1}{s^3+10s^2+35s+41}(3 \quad (s^2+7s+10) \quad (s+2))$$

$$C(SI-A)^{-1}B = \frac{1}{s^3+10s^2+35s+41}((s+5) \quad (s^2+7s+10) \quad -(4s+11))\begin{pmatrix}0\\0\\1\end{pmatrix}$$

$$\frac{Y(s)}{U(s)} = \frac{(s+2)}{s^3+10s^2+35s+41}$$

2. Determine the controllability and observability of the following system.

$$\begin{pmatrix}x_1\\x_2\\x_3\end{pmatrix} = \begin{pmatrix}\mathbf{0} & \mathbf{1} & \mathbf{0}\\ \mathbf{0} & \mathbf{0} & \mathbf{1}\\ \mathbf{0} & \mathbf{-2} & \mathbf{-3}\end{pmatrix}\begin{pmatrix}x_1\\x_2\\x_3\end{pmatrix} + \begin{pmatrix}\mathbf{0}\\\mathbf{0}\\\mathbf{10}\end{pmatrix}u; \quad y = (\mathbf{1} \quad \mathbf{0} \quad \mathbf{0})\begin{pmatrix}x_1\\x_2\\x_3\end{pmatrix}$$

Solution

$$A = \begin{pmatrix}0 & 1 & 0\\ 0 & 0 & 1\\ 0 & -2 & -3\end{pmatrix};\ B = \begin{pmatrix}0\\0\\10\end{pmatrix};\ C = (1\ 0\ 0)$$

Transfer function = $\frac{Y(s)}{U(s)} = C(SI-A)^{-1}B + D$

$$(SI-A) = \begin{pmatrix}s & 0 & 0\\ 0 & s & 0\\ 0 & 0 & s\end{pmatrix} - \begin{pmatrix}0 & 1 & 0\\ 0 & 0 & 1\\ 0 & -2 & -3\end{pmatrix} = \begin{pmatrix}s & -1 & 0\\ 0 & s & -1\\ 0 & 2 & s+3\end{pmatrix}$$

$$(SI-A)^{-1} = \frac{Adj\,(sI-A)}{\det(sI-A)}$$

$$det(sI-A) = \begin{vmatrix}s & -1 & 0\\ 0 & s & -1\\ 0 & 2 & s+3\end{vmatrix}$$

$$= s\{s(s+3)-(-2)\} + 1\{0\} + 0\{0\}$$

$$= s(s^2+6s+4)$$

$$= s^3+6s^2+4s$$

$$Adj\,(sI-A) = (cofactor\,(sI-A))^T = \begin{pmatrix} +\begin{vmatrix} s & -1 \\ 2 & s+3 \end{vmatrix} & -\begin{vmatrix} 0 & -1 \\ 0 & (s+3) \end{vmatrix} & +\begin{vmatrix} 0 & s \\ 0 & 2 \end{vmatrix} \\ -\begin{vmatrix} -1 & 0 \\ 2 & (s+3) \end{vmatrix} & +\begin{vmatrix} s & 0 \\ 0 & (s+3) \end{vmatrix} & -\begin{vmatrix} s & -1 \\ 0 & 2 \end{vmatrix} \\ +\begin{vmatrix} -1 & 0 \\ s & -1 \end{vmatrix} & -\begin{vmatrix} s & 0 \\ 0 & -1 \end{vmatrix} & +\begin{vmatrix} s & -1 \\ 0 & s \end{vmatrix} \end{pmatrix}^T$$

$$= \begin{pmatrix} (s^2+3s+2) & 0 & 0 \\ (s+3) & (s^2+3s) & -2s \\ 1 & s & s^2 \end{pmatrix}^T$$

$$\begin{pmatrix} (s^2+3s+2) & (s+3) & 1 \\ 0 & (s^2+3s) & s \\ 0 & -2s & s^2 \end{pmatrix}$$

$$(SI-A)^{-1} = \frac{Adj\,(sI-A)}{\det(sI-A)} = \frac{1}{s^3+6s^2+4s}\begin{pmatrix} (s^2+3s+2) & (s+3) & 1 \\ 0 & (s^2+3s) & s \\ 0 & -2s & s^2 \end{pmatrix}$$

$$C(SI-A)^{-1} = (1 \quad 1 \quad 0)\ \frac{1}{s^3+6s^2+4s}\begin{pmatrix} (s^2+3s+2) & (s+3) & 1 \\ 0 & (s^2+3s) & s \\ 0 & -2s & s^2 \end{pmatrix}$$

$$= \frac{1}{s^3+6s^2+4s}((s^2+3s+2) \quad (s^2+4s+3) \quad (s+1))$$

$$C(SI-A)^{-1}B == \frac{1}{s^3+6s^2+4s}((s^2+3s+2) \quad (s^2+4s+3) \quad (s+1))\begin{pmatrix} 0 \\ 0 \\ 10 \end{pmatrix}$$

$$\frac{Y(s)}{U(s)} = \frac{10(s+1)}{s^3+6s^2+4s}$$

<u>Controllability and Observability</u>

Kalman's method of testing controllability and obsevability

Controllability

A system is said to be completely controllable if it is possible to transfer the system state from any initial state $X(t_o)$ at any other desired state X(t), in specified finite time by a control vector U(t)

$$Q_c = [B \quad AB \quad A^2B]$$

If rank and order of Q_c are equal then, the system is controllable

Observability

A system is said to be completely observable if every state X(t) can be completely identified by measurements of the output Y(t) over a finite time interval.

$$Q_0 = [C^T \quad A^TC^T \quad (A^T)^2C^T]$$

If rank and order of Q_c are equal then, the system is obsevable

Problems

1. Determine the controllability and observability of the following system.

$$\begin{pmatrix} X_1 \\ X_2 \\ X_3 \end{pmatrix} = \begin{pmatrix} 0 & 1 & 0 \\ 0 & 0 & 1 \\ 0 & -2 & -3 \end{pmatrix} \begin{pmatrix} x_1 \\ x_2 \\ x_3 \end{pmatrix} + \begin{pmatrix} 0 \\ 0 \\ 10 \end{pmatrix} u \ ; \quad y = (1\ 0\ 0) \begin{pmatrix} x_1 \\ x_2 \\ x_3 \end{pmatrix}$$

Solution

$$A = \begin{pmatrix} 0 & 1 & 0 \\ 0 & 0 & 1 \\ 0 & -2 & -3 \end{pmatrix} ; B = \begin{pmatrix} 0 \\ 0 \\ 10 \end{pmatrix} \ ; \quad C = (1\ 0\ 0)$$

Controllability

$$Q_c = (B \quad AB \quad A^2B)$$

$$B = \begin{pmatrix} 0 \\ 0 \\ 10 \end{pmatrix}$$

$$A.B = \begin{pmatrix} 0 & 1 & 0 \\ 0 & 0 & 1 \\ 0 & -2 & -3 \end{pmatrix} \begin{pmatrix} 0 \\ 0 \\ 10 \end{pmatrix} = \begin{pmatrix} 0 \\ 10 \\ -30 \end{pmatrix}$$

$$A^2 = A.A = \begin{pmatrix} 0 & 1 & 0 \\ 0 & 0 & 1 \\ 0 & -2 & -3 \end{pmatrix} \begin{pmatrix} 0 & 1 & 0 \\ 0 & 0 & 1 \\ 0 & -2 & -3 \end{pmatrix} = \begin{pmatrix} 0 & 0 & 1 \\ 0 & -2 & -3 \\ 0 & 6 & 7 \end{pmatrix}$$

$$A^2B = \begin{pmatrix} 0 & 0 & 1 \\ 0 & -2 & -3 \\ 0 & 6 & 7 \end{pmatrix} \begin{pmatrix} 0 \\ 0 \\ 10 \end{pmatrix} = \begin{pmatrix} 10 \\ -30 \\ 70 \end{pmatrix}$$

$$Q_c = [B \quad AB \quad A^2B] = \begin{pmatrix} 0 & 0 & 10 \\ 0 & 10 & -30 \\ 10 & -30 & 70 \end{pmatrix}$$

$$|Q_c| = 10(-100) = -1000 \neq 0$$

$$Rank = Order = 3 \quad \therefore System\ is\ controllable$$

Obsevability

$$Q_0 = \begin{pmatrix} C \\ AC \\ A^2C \end{pmatrix} = (C^T \quad A^TC^T \quad (A^T)^2C^T)$$

$$A^T = \begin{pmatrix} 0 & 0 & 0 \\ 1 & 0 & -2 \\ 0 & 1 & -3 \end{pmatrix} ; C^T = \begin{pmatrix} 1 \\ 0 \\ 0 \end{pmatrix}$$

$$A^T C^T = \begin{pmatrix} 0 & 0 & 0 \\ 1 & 0 & -2 \\ 0 & 1 & -3 \end{pmatrix} \begin{pmatrix} 1 \\ 0 \\ 0 \end{pmatrix} = \begin{pmatrix} 0 \\ 1 \\ 0 \end{pmatrix}$$

$$A^{T^2} = A^T A^T = \begin{pmatrix} 0 & 0 & 0 \\ 1 & 0 & -2 \\ 0 & 1 & -3 \end{pmatrix} \begin{pmatrix} 0 & 0 & 0 \\ 1 & 0 & -2 \\ 0 & 1 & -3 \end{pmatrix} = \begin{pmatrix} 0 & 0 & 0 \\ 0 & -2 & 6 \\ 1 & -3 & 7 \end{pmatrix}$$

$$A^{T^2} C^T = \begin{pmatrix} 0 & 0 & 0 \\ 0 & -2 & 6 \\ 1 & -3 & 7 \end{pmatrix} \begin{pmatrix} 0 \\ 1 \\ 0 \end{pmatrix} = \begin{pmatrix} 0 \\ 0 \\ 1 \end{pmatrix}$$

$$Q_0 = [C^T \quad A^T C^T \quad (A^T)^2 C^T] = \begin{pmatrix} 1 & 0 & 0 \\ 0 & 1 & 0 \\ 0 & 0 & 1 \end{pmatrix}$$

$$|Q_0| = \begin{vmatrix} 1 & 0 & 0 \\ 0 & 1 & 0 \\ 0 & 0 & 1 \end{vmatrix} = 1(1) = 1 \neq 0$$

$Order = Rank = 3; \therefore system\ is\ observable$

---

2. Determine the controllability and observability of the following system.

$$\begin{pmatrix} \boldsymbol{X_1} \\ \boldsymbol{X_2} \\ \boldsymbol{X_3} \end{pmatrix} = \begin{pmatrix} \mathbf{1} & \mathbf{2} & \mathbf{1} \\ \mathbf{0} & \mathbf{1} & \mathbf{0} \\ \mathbf{1} & \mathbf{-4} & \mathbf{3} \end{pmatrix} \begin{pmatrix} \boldsymbol{x_1} \\ \boldsymbol{x_2} \\ \boldsymbol{x_3} \end{pmatrix} + \begin{pmatrix} \mathbf{0} \\ \mathbf{0} \\ \mathbf{1} \end{pmatrix} \boldsymbol{u} \ ; \quad \boldsymbol{y} = (\mathbf{1} \quad \mathbf{1} \quad \mathbf{0}) \begin{pmatrix} \boldsymbol{x_1} \\ \boldsymbol{x_2} \\ \boldsymbol{x_3} \end{pmatrix}$$

Controllability

$Q_c = [B \quad AB \quad A^2 B]$

$$B = \begin{pmatrix} 0 \\ 0 \\ 1 \end{pmatrix}$$

$$A.B = \begin{pmatrix} 1 & 2 & 1 \\ 0 & 1 & 0 \\ 1 & -4 & 3 \end{pmatrix} \begin{pmatrix} 0 \\ 0 \\ 1 \end{pmatrix} = \begin{pmatrix} 1 \\ 0 \\ 3 \end{pmatrix}$$

$$A^2 = A.A = \begin{pmatrix} 1 & 2 & 1 \\ 0 & 1 & 0 \\ 1 & -4 & 3 \end{pmatrix} \begin{pmatrix} 1 & 2 & 1 \\ 0 & 1 & 0 \\ 1 & -4 & 3 \end{pmatrix} = \begin{pmatrix} 2 & 0 & 4 \\ 0 & 1 & 0 \\ 4 & -14 & 10 \end{pmatrix}$$

$$A^2 B = \begin{pmatrix} 2 & 0 & 4 \\ 0 & 1 & 0 \\ 4 & -14 & 10 \end{pmatrix} \begin{pmatrix} 0 \\ 0 \\ 1 \end{pmatrix} = \begin{pmatrix} 4 \\ 0 \\ 10 \end{pmatrix}$$

$$Q_c = [B \quad AB \quad A^2 B] = \begin{pmatrix} 0 & 1 & 4 \\ 0 & 0 & 0 \\ 1 & 3 & 10 \end{pmatrix}$$

$|Q_c| = -1(0) + 4(0) = 0$

$Rank \neq 3 \quad \therefore System\ is\ uncontrollable$

Obsevability

$$Q_0 = \begin{pmatrix} C \\ AC \\ A^2C \end{pmatrix} = (C^T \quad A^TC^T \quad (A^T)^2C^T)$$

$$A^T = \begin{pmatrix} 1 & 0 & 1 \\ 2 & 1 & -4 \\ 1 & 0 & 3 \end{pmatrix}; C^T = \begin{pmatrix} 1 \\ 1 \\ 0 \end{pmatrix}$$

$$A^TC^T = \begin{pmatrix} 1 & 0 & 1 \\ 2 & 1 & -4 \\ 1 & 0 & 3 \end{pmatrix}\begin{pmatrix} 1 \\ 1 \\ 0 \end{pmatrix} = \begin{pmatrix} 1 \\ 3 \\ 1 \end{pmatrix}$$

$$A^{T^2} = A^TA^T = \begin{pmatrix} 1 & 0 & 1 \\ 2 & 1 & -4 \\ 1 & 0 & 3 \end{pmatrix}\begin{pmatrix} 1 & 0 & 1 \\ 2 & 1 & -4 \\ 1 & 0 & 3 \end{pmatrix} = \begin{pmatrix} 2 & 0 & 4 \\ 0 & 1 & -14 \\ 4 & 0 & 10 \end{pmatrix}$$

$$A^{T^2}C^T = \begin{pmatrix} 2 & 0 & 4 \\ 0 & 1 & -14 \\ 4 & 0 & 10 \end{pmatrix}\begin{pmatrix} 1 \\ 1 \\ 0 \end{pmatrix} = \begin{pmatrix} 2 \\ 1 \\ 4 \end{pmatrix}$$

$$Q_0 = [C^T \quad A^TC^T \quad (A^T)^2C^T] = \begin{pmatrix} 1 & 1 & 2 \\ 1 & 3 & 1 \\ 0 & 1 & 4 \end{pmatrix}$$

$$|Q_0| = \begin{vmatrix} 1 & 1 & 2 \\ 1 & 3 & 1 \\ 0 & 1 & 4 \end{vmatrix} = 1(12-1) - 1(4) + 2(1) = 9 \neq 0$$

$$Order = Rank = 3; \therefore system\ is\ observable$$

EXAMPLE 3

Write the state equations for the system shown in fig 5.6.1 in which x_1, x_2 and x_3 constitute the state vector. Determine whether the system is completely controllable and observable.

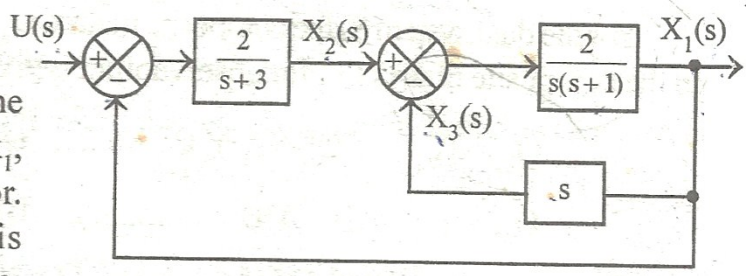

Fig 5.6.1

SOLUTION

To find state model

The state equations are obtained by writing equations for the output of each block and then taking inverse Laplace transform.

With reference to fig 5.6.2 we can write,

$$X_1(s) = [X_2(s) - X_3(s)]\left[\frac{2}{s(s+1)}\right]$$

$$s(s+1)\,X_1(s) = 2X_2(s) - 2X_3(s)$$

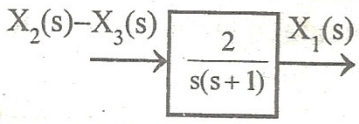

Fig 5.6.2

$$s^2 X_1(s) + s X_1(s) = 2X_2(s) - 2X_3(s)$$

On taking inverse laplace transform,

$$\ddot{x}_1 + \dot{x}_1 = 2x_2 - 2x_3 \qquad .....(5.6.1)$$

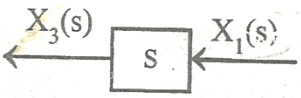

Fig 5.6.3

With reference to fig 5.6.3, we can write,

$$X_3(s) = sX_1(s)$$

On taking inverse laplace transform

$$x_3 = \dot{x}_1 \qquad .....(5.6.2)$$

With reference to fig 5.6.4 we can write

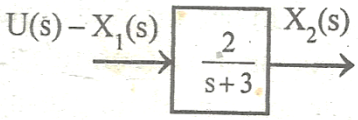

Fig 5.6.4

$$X_2(s) = [U(s) - X_1(s)]\left[\frac{2}{s+3}\right]$$

$$X_2(s)(s+3) = 2U(s) - 2X_1(s)$$

$$sX_2(s) + 3X_2(s) = 2U(s) - 2X_1(s)$$

On taking inverse Laplace transform

$$\dot{x}_2 + 3x_2 = 2u - 2x_1$$

$$\dot{x}_2 = -2x_1 - 3x_2 + 2u \qquad .....(5.6.3)$$

From equ(5.6.2) we get, $\dot{x}_1 = x_3$; $\therefore \ddot{x}_1 = \dot{x}_3$

Put $\dot{x}_1 = x_3$ and $\ddot{x}_1 = \dot{x}_3$ in equation (5.6.1)

$$\therefore \dot{x}_3 + x_3 = 2x_2 - 2x_3$$

$$\dot{x}_3 = 2x_2 - 2x_3 - x_3$$

$$\dot{x}_3 = 2x_2 - 3x_3 \qquad .....(5.6.4)$$

The state equation are given by equations (5.6.2), (5.6.3) and (5.6.4)

$$\dot{x}_1 = x_3$$

$$\dot{x}_2 = -2x_1 - 3x_2 + 2u$$

$$\dot{x}_3 = 2x_2 - 3x_3$$

The output equation is $y = x_1$

The state model in the matrix form is

$$\begin{bmatrix} \dot{x}_1 \\ \dot{x}_2 \\ \dot{x}_3 \end{bmatrix} = \begin{bmatrix} 0 & 0 & 1 \\ -2 & -3 & 0 \\ 0 & 2 & -3 \end{bmatrix} \begin{bmatrix} x_1 \\ x_2 \\ x_3 \end{bmatrix} + \begin{bmatrix} 0 \\ 2 \\ 0 \end{bmatrix} u \quad ; \quad y = \begin{bmatrix} 1 & 0 & 0 \end{bmatrix} \begin{bmatrix} x_1 \\ x_2 \\ x_3 \end{bmatrix}$$

KALMAN'S TEST FOR CONTROLLABILITY

$$A^2 = A.A = \begin{bmatrix} 0 & 0 & 1 \\ -2 & -3 & 0 \\ 0 & 2 & -3 \end{bmatrix} \begin{bmatrix} 0 & 0 & 1 \\ -2 & -3 & 0 \\ 0 & 2 & -3 \end{bmatrix} = \begin{bmatrix} 0 & 2 & -3 \\ 6 & 9 & -2 \\ -4 & -12 & 9 \end{bmatrix}$$

$$A.B = \begin{bmatrix} 0 & 0 & 1 \\ -2 & -3 & 0 \\ 0 & 2 & -3 \end{bmatrix} \begin{bmatrix} 0 \\ 2 \\ 0 \end{bmatrix} = \begin{bmatrix} 0 \\ -6 \\ 4 \end{bmatrix}$$

$$A^2.B = \begin{bmatrix} 0 & 2 & -3 \\ 6 & 9 & -2 \\ -4 & -12 & 9 \end{bmatrix} \begin{bmatrix} 0 \\ 2 \\ 0 \end{bmatrix} = \begin{bmatrix} 4 \\ 18 \\ -24 \end{bmatrix}$$

The composite matrix for controllability, $Q_c = \begin{bmatrix} B & AB & A^2B \end{bmatrix}$

$$= \begin{bmatrix} 0 & 0 & 4 \\ 2 & -6 & 18 \\ 0 & 4 & -24 \end{bmatrix}$$

Determinant of $Q_c = \begin{vmatrix} 0 & 0 & 4 \\ 2 & -6 & 18 \\ 0 & 4 & -24 \end{vmatrix} = 4 \times 8 = 32$; Since $|Q_c| \neq 0$, the rank of $Q_c = 3$.

Hence the system is completely state controllable

KALMAN'S TEST FOR OBSERVABILITY

$$A^T = \begin{bmatrix} 0 & 0 & 1 \\ -2 & -3 & 0 \\ 0 & 2 & -3 \end{bmatrix}^T = \begin{bmatrix} 0 & -2 & 0 \\ 0 & -3 & 2 \\ 1 & 0 & -3 \end{bmatrix}$$

$$C^T = \begin{bmatrix} 1 & 0 & 0 \end{bmatrix}^T = \begin{bmatrix} 1 \\ 0 \\ 0 \end{bmatrix}$$

$$\left(A^T\right)^2 = \begin{bmatrix} 0 & -2 & 0 \\ 0 & -3 & 2 \\ 1 & 0 & -3 \end{bmatrix} \begin{bmatrix} 0 & -2 & 0 \\ 0 & -3 & 2 \\ 1 & 0 & -3 \end{bmatrix} = \begin{bmatrix} 0 & 6 & -4 \\ 2 & 9 & -12 \\ -3 & -2 & 9 \end{bmatrix}$$

$$A^TC^T = \begin{bmatrix} 0 & -2 & 0 \\ 0 & -3 & 2 \\ 1 & 0 & -3 \end{bmatrix} \begin{bmatrix} 1 \\ 0 \\ 0 \end{bmatrix} = \begin{bmatrix} 0 \\ 0 \\ 1 \end{bmatrix}$$

$$\left(A^T\right)^2 C^T = \begin{bmatrix} 0 & 6 & -4 \\ 2 & 9 & -12 \\ -3 & -2 & 9 \end{bmatrix} \begin{bmatrix} 1 \\ 0 \\ 0 \end{bmatrix} = \begin{bmatrix} 0 \\ 2 \\ -3 \end{bmatrix}$$

$$\left.\begin{array}{l}\text{The composite matrix} \\ \text{for observability}\end{array}\right\} Q_o = \left[C^T \;\; A^T C^T \;\; \left(A^T\right)^2 C^T\right] = \begin{bmatrix} 1 & 0 & 0 \\ 0 & 0 & 2 \\ 0 & 1 & -3 \end{bmatrix}$$

$$\text{Determinant of } Q_o = \begin{vmatrix} 1 & 0 & 0 \\ 0 & 0 & 2 \\ 0 & 1 & -3 \end{vmatrix} = 1 \times -2 = -2 \;\; ; \;\; \text{Since } |Q_o| \neq 0, \;\; \text{the rank of } Q_o = 3$$

Hence the system is completely observable. (or all the state variables of the system are observable).